C3 ENVIRONMENTAL

(A DIVISION OF CANADIAN CONSTRUCTION CONTROLS LIMITED)

WATERLOO BARRIER™ SYSTEM

SHEET PILE & SEALANT INSTALLATION REPORT

VENUS MINE SITE
TAILINGS POND
KM 86 - KLONDIKE HIGHWAY, YUKON TERRITORY
D.P.W. PROJECT # 626483

OCTOBER 16th, 1995

ENVIRONMENTAL
Environmental Contractors & Engineers

October 18th, 1995

Public Works & Government Services Canada
Transportation
Architectural & Engineering Services
1000, 9700 Jasper Avenue
Edmonton, Alberta
T2J 4E2

Attention: Mr. George Strynadka, P.Eng.

Dear Sir:

RE: WATERLOO BARRIER™ QA/QC REPORT - VENUS MINE SITE

The enclosed report provides detailed records of the sheet pile and sealant installation for the Waterloo Barrier™ System, installed between August 28th and September 22nd, 1995 at the former Venus Mine Site, Yukon Territory.

The data and information enclosed in this report is confidential. The information is intended for the sole use of the individual or entity named above. Any disclosure, copying or use of the contents of this report is expressly prohibited without the written consent of C3 Environmental, an operating division of Canadian Construction Controls Limited.

If, upon review of this report, any questions arise regarding the content or work completed please contact the undersigned at your earliest convenience.

Yours truly,
C3 ENVIRONMENTAL

Bart Kanters, *B.A.Sc.*
Project Manager

SUMMARY

This report details the installation of a Waterloo Barrier™ cut-off wall during the period of August 28th to September 22nd, 1995 at the former Venus Mine Site Tailings Pond, located near km 86 of the Klondike Highway, Yukon Territory. A cutoff wall was installed in conjunction with a liner and clay cap to reduce the migration of heavy metals from the former tailings pond to the Windy Arm of Tagish Lake. The barrier was installed along the south and east sides of the former tailings pond as indicated on D.P.W. project drawing #1.

Canadian Metal Rolling Mills, of Cambridge, Ontario, supplied the steel WZ-75 sheet piles used to construct the Waterloo Barrier™ cutoff wall. R.C. Crane & Construction Ltd., of Whitehorse, Yukon Territory, was contracted to install the sheet piling and C3 Environmental was contracted to perform Quality Assurance/Quality Control (QA/QC) inspection and sealant installation.

A prepackaged silica fume modified, cementitious based grout, WBS Type 301, was used to seal the joints of the Waterloo Barrier™ wall. Detailed records were collected for each grouted sheet pile joint to ensure proper sealing was achieved.

Approximately 208 linear meters of Waterloo Barrier™ sheet piling was installed in varying depths as indicated in the project records (Appendix A-E).

Based upon the results of C3 Environmental's QA/QC inspection, the Waterloo Barrier™ installation generally conformed to the required procedures and specifications.

TABLE OF CONTENTS

LIST OF FIGURES

LIST OF TABLES

LIST OF PICTURES

1.0 INTRODUCTION

The Waterloo Barrier™ is a low hydraulic conductivity groundwater cutoff wall which was developed by the Centre for Groundwater Research at the University of Waterloo under the direction of Professor John Cherry. This patented groundwater containment system is composed of the following two basic elements:

- Custom rolled steel sheet piling incorporating a sealable cavity at the joint.
- Site specific grouts used for sealing the Waterloo Barrier™ joints.

The Waterloo Barrier™ pile differs from most conventional piling in that it is cold rolled to produce a sealable cavity at the joints. The sheet piling is currently available in a 7.5mm thickness and has been rolled in lengths up to 22.8 metres (75 feet). The section produced by this patented rolling method has the following advantages:

- It provides a inspectable cavity that can be used to confirm the integrity of the sheets and joints after driving.
- It provides a controlled leak path that can be sealed with a grout.

1.1 SITE BACKGROUND

Installation of the Waterloo Barrier™ cutoff wall took place between August 28th and September 22nd, 1995 at the former Venus Mine Site, located near km 86 of the Klondike Highway, Yukon Territory. The wall was installed along the south and east sides of the former tailings pond as indicated on D.P.W. project drawing #1.

The cutoff wall was constructed from WZ-75 Waterloo Barrier™ sheet piles of various lengths as indicated in the project records. Canadian Metal Rolling Mills, of Cambridge, Ontario, manufactured all of the necessary piles for the wall.

The Sheet Pile Installation QA/QC Program included the following:

- Visual inspection of the WZ-75 piles prior to installation.
- Graduated marking of the piles.
- Documentation of driving times for each pile and/or pile pair driven.
- Inspection and documentation of the vertical alignment of each individual sheet or pair of piles.
- Flushing/probing of each joint to confirm that the sealable cavity was free of obstructions and installed to the required depth.

The Sealant Program included the following:

- Flushing of loose material from the sealable cavities of the WZ-75 piles.
- Supervision of sealant mixing.
- Random testing of the sealant prior to installation to confirm its physical characteristics.
- Monitoring of the WZ-75 joint grouting.

Appendices A-E contain the quality assurance project records for each stage of the sheet pile and sealant installations.

2.0 WATERLOO BARRIER™ SHEET PILE SPECIFICATIONS

The sheet piling used to construct the cutoff wall, at the Venus Mine Site, was Waterloo Barrier™ WZ-75. A typical cross-section of the WZ-75 pile is shown in Figure 1.

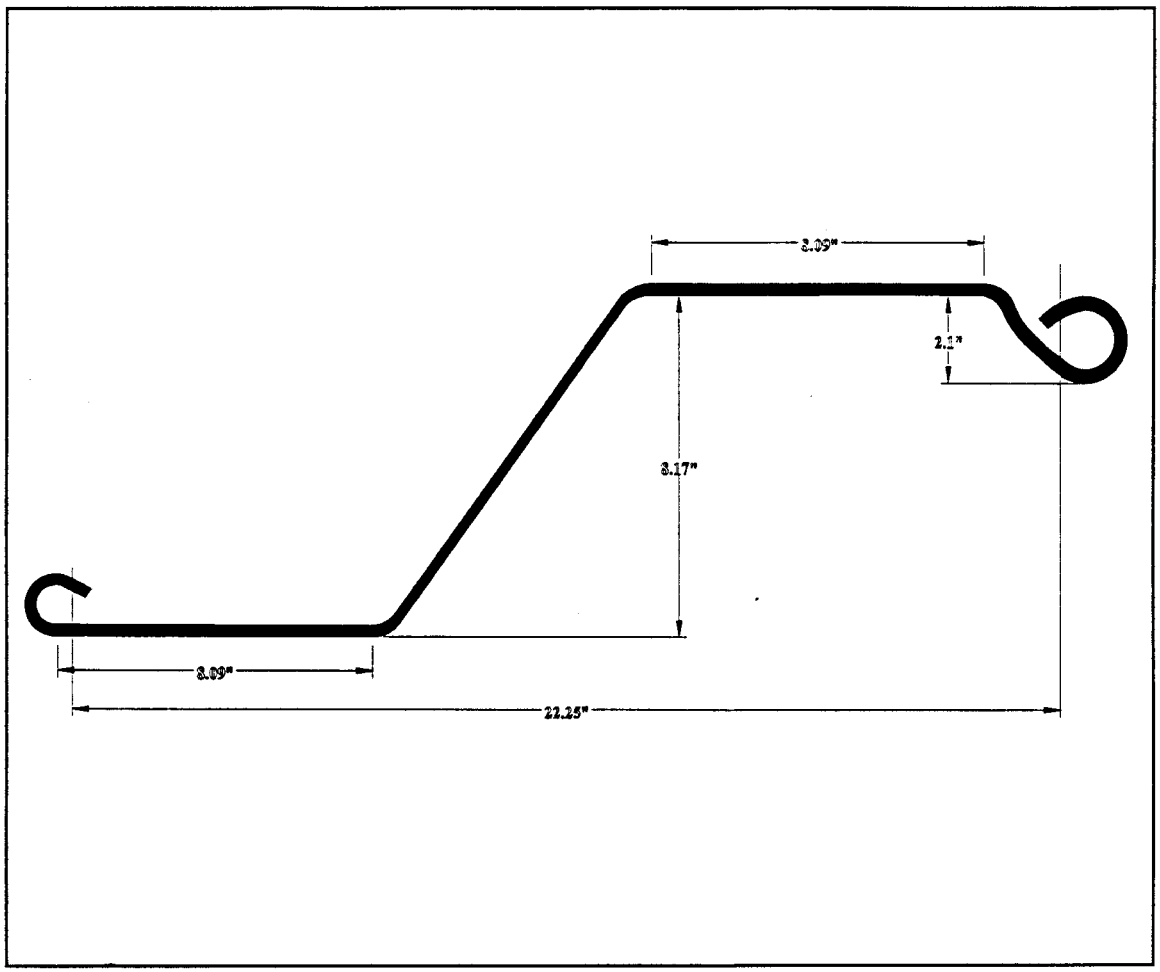

Figure 1: WZ-75 Cross-Section

The general section properties of the WZ-75 pile are documented in Table 1.

Table 1: Section Properties of WZ-75 Sheet Piling

SHEET PILE CHARACTERISTIC	SHEET PILE SPECIFICATION
Nominal Width	565 mm
Height	208 mm
Thickness	7.5 mm
Section Area	67.5 cm^2
Weight	53 kg/lin. m
Moment of Inertia (I)	8870 cm^4/wall m
Radius of Gyration (r)	86.1 mm
Section Modulus (S)	860 cm^3/wall m

The Waterloo Barrier™ WZ-75 sheet pile is a patented section with an enlarged female joint which allows for the installation of a site specific sealant material to reduce the bulk hydraulic conductivity of the barrier wall.

A key procedure in ensuring proper installation of the WZ-75 pile is the attachment of a driving shoe (foot plate) at the base of every female joint (Figure 2). The driving shoe prevents the entry of debris through the base of the sheet pile joint during installation. Figure 3 shows the configuration of the foot plates used with the WZ-75 section.

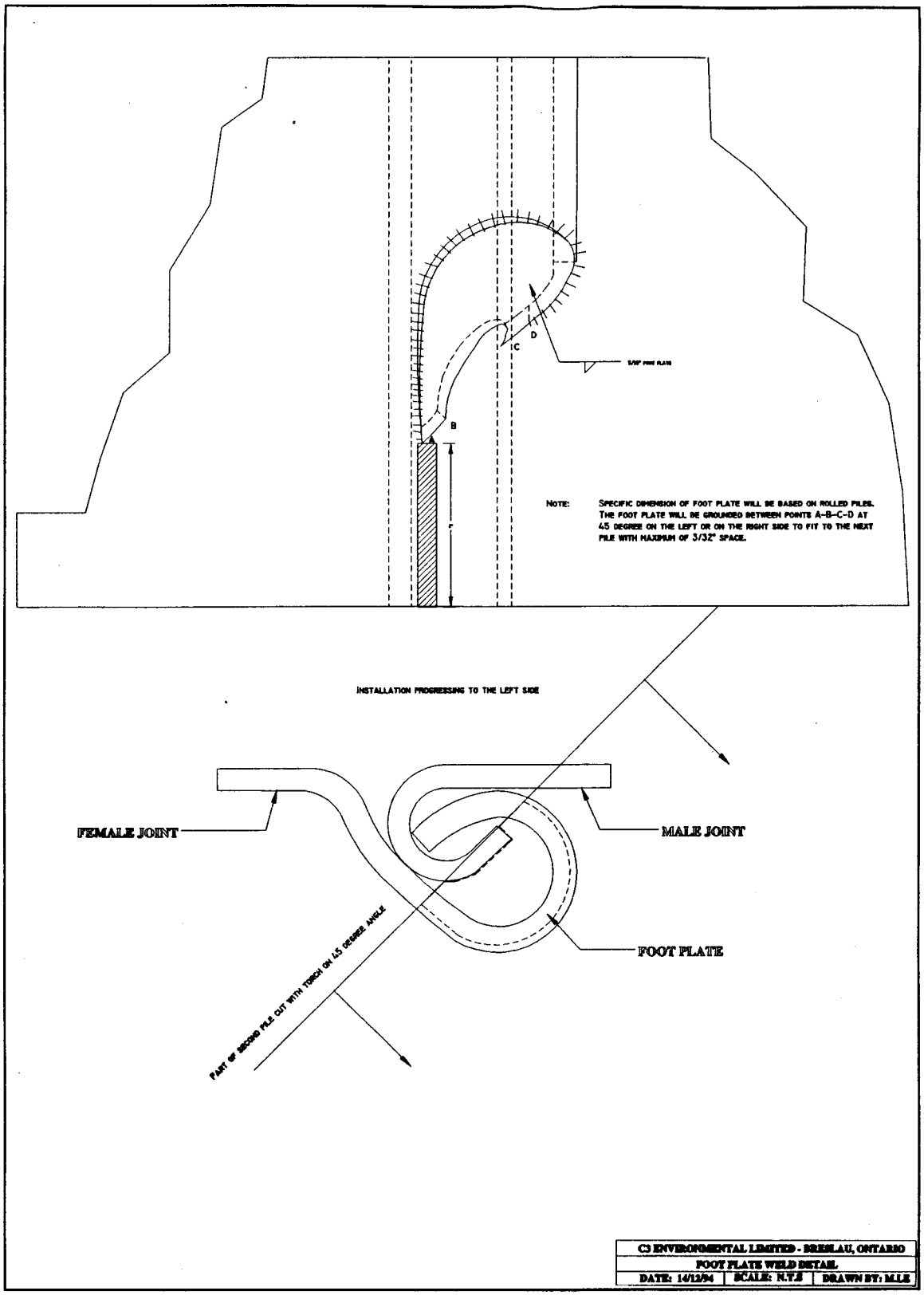

Figure 2: WZ-75 Foot Plate Section

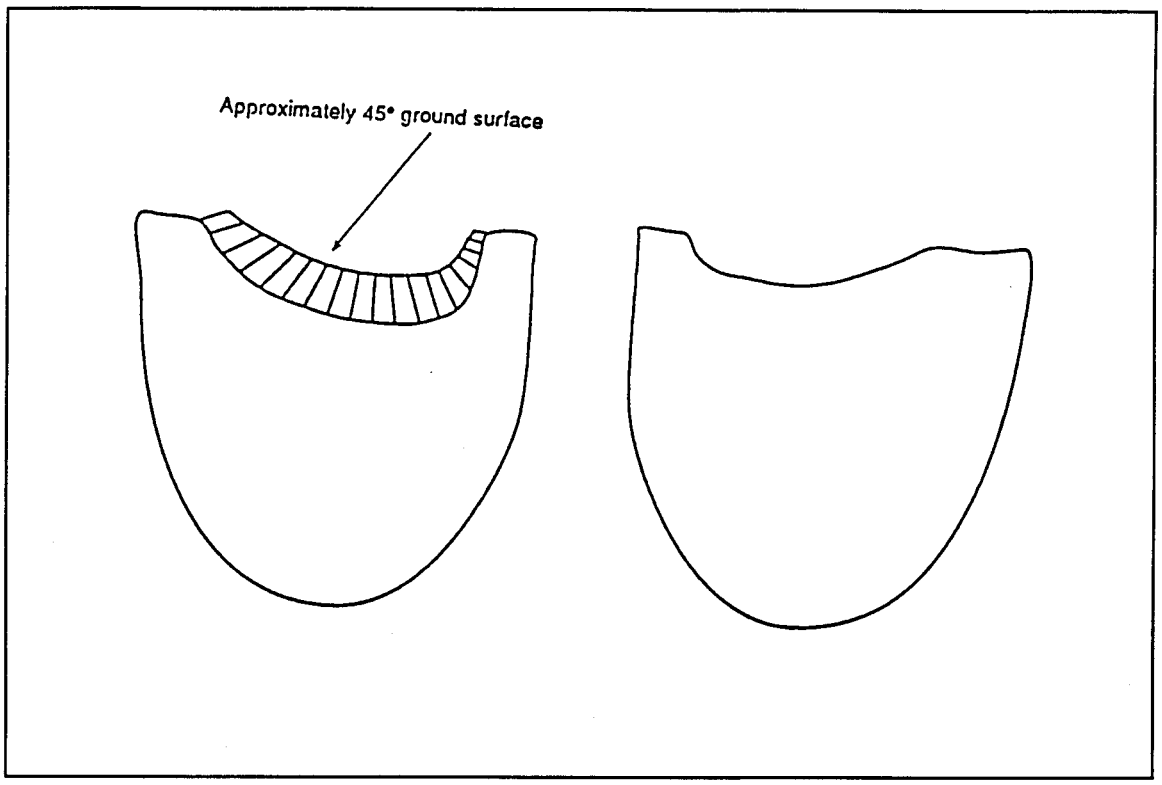

Figure 3: WZ-75 Foot Plate Configuration

3.0 SEALANT MATERIAL

A prepackaged silica fume modified, cementitious based grout (WBS Type 301) was used to seal the joints of the Waterloo Barrier™ wall. WBS Type 301 consists of a blend of fly ash, silica fume, cement and chemical admixtures which forms a stable and impermeable grout.

3.1 SEALANT MIXING DATA

Due to the properties and thixotropic nature of the sealant, a colloidal mixer was required to develop the necessary shear force to mix the materials properly.

Table 2 contains general mixing data for the WBS Type 301 sealant.

Table 2: WBS Type 301 Mixing Data

DESCRIPTION	REQUIREMENTS
Colloidal Mixer:	1700 RPM mixing speed.
Mixing Time:	2 - 3 Minutes.
WBS Type 301 Temperature:	20 - 25° Celsius (after mixing).
WBS Type 301 Viscosity:	95 - 120 Marsh seconds.
WBS Type 301 Gel Time:	1.5 - 2.0 Hours.
WBS Type 301 Set Time:	3 - 4 Days.

Random quality assurance testing was conducted on the sealant material to ensure that proper mix tolerances were maintained.

4.0 SHEET PILE DRIVING EQUIPMENT

R.C. Crane & Construction Ltd., of Whitehorse, Yukon Territory, was contracted to install the Waterloo Barrier™ sheet piles at the Venus Mine Site. The equipment used was as follows:

- Lewis 2,500 lb Drop Hammer (includes Leads & Follower).
- Grove 20 Ton Telescopic Boom Crane.
- P & H 20 Ton Lattice Boom Crawler Crane.
- P & H Track Backhoe.
- Cat 950 Loader.

Photo 1 shows the pile driving in progress.

Photo 1: Pile Driving Equipment

Inspection of the Waterloo Barrier™ installation was performed by a Quality Assurance Engineer trained and certified by C3 Environmental Limited and Waterloo Barrier Inc.

5.0 SEALANT INSTALLATION EQUIPMENT

The sealant installation was completed by C3 Environmental using the following equipment:

MIXING EQUIPMENT

- Colloidal Mixer.
- Grout Holding/Agitator Tanks.
- Water Measuring Equipment.
- Viscosity Measuring Equipment.

GROUTING EQUIPMENT

- Portable Air Compressor.
- Moyno 3L4 Progressive Cavity Pump.
- Grout Volume Measuring Equipment.
- Grout Lines and Pressure Control Valves.

Photo 2 shows the grouting equipment required for this project.

Photo 2: Typical Grouting Equipment

6.0 WATERLOO BARRIER™ INSTALLATION PROCEDURES

6.1 SHEET PILE INSTALLATION INSPECTION PROCEDURES

The sheet pile quality assurance inspection was performed in three phases:

- VISUAL SURVEY OF SHEET PILES.
- PILE DRIVING MONITORING.
- SEALABLE CAVITY INSPECTION.

6.1.1 VISUAL SURVEY OF SHEET PILES

A visual survey of the Waterloo Barrier™ sheet piles was performed to confirm the general condition of each sheet. Visual inspections were conducted by the Quality Assurance Engineer at the rolling mill prior to shipment and at the construction site prior to installation.

The following is a brief outline of the inspection points:

1) **PILE THICKNESS** - A hand micrometer was used to measure the thickness of the sheet piling prior to driving.

2) **LINEARITY INSPECTION** - A visual inspection was conducted on each of the piles to ensure that the piles had not been bent or bowed during transportation.

3) **SURFACE CONDITION** - The surface of the piles were inspected for defects and the sealable cavity was inspected to ensure that it had not been deformed.

4) **SHEET PILE LENGTH** - Each sheet pile was measured to confirm the specified length.

5) **FOOT PLATE INSPECTION** - A visual inspection of each foot plate was conducted to ensure proper installation.

6) **PILE MARKING** - One foot graduations were marked on the sheet piles to assist in the measurement of driving rates during installation.

6.1.2 MONITORING OF SHEET PILE DRIVING

Records were collected for each of the WZ-75 sheet piles installed. The Quality Assurance Engineer was present on site during the entire driving process. The following is a brief description of the inspection items documented:

1) **SHEET PILE IDENTIFICATION** - Each sheet pile was numbered for later reference.

2) **DRIVING RECORDS** - Driving records were collected on each sheet pile installed in the Waterloo Barrier™ System. Driving records documented the driving rates for each sheet pile installed as well as any notes or comments regarding the installation (Photo 3).

3) **DRIVING SEQUENCE** - The Quality Assurance Engineer ensured that the driving contractor placed the sheet piles in the proper sequence.

4) **DRIVING DEPTH** - The Quality Assurance Engineer measured and documented the installed depth of each sheet pile.

Photo 3: Typical Driving Record Collection

5) **JOINT HEATING** - The sheet piles were monitored for indications of heating due to friction.

6) **SHEET PILE ALIGNMENT** - Sheet pile alignment was monitored by the Quality Assurance Engineer and the results were presented to the driving crew. After installation was complete, the final alignment of each pile was recorded using a digital inclinometer. Measurements were made in both the X & Y planes (See Figure 4 for Plane Definition). The Quality Assurance Engineer provided the client's Project Manager with Daily Inspection Reports outlining the alignment & depth of the sheet piling, so a determination of acceptance could be made.

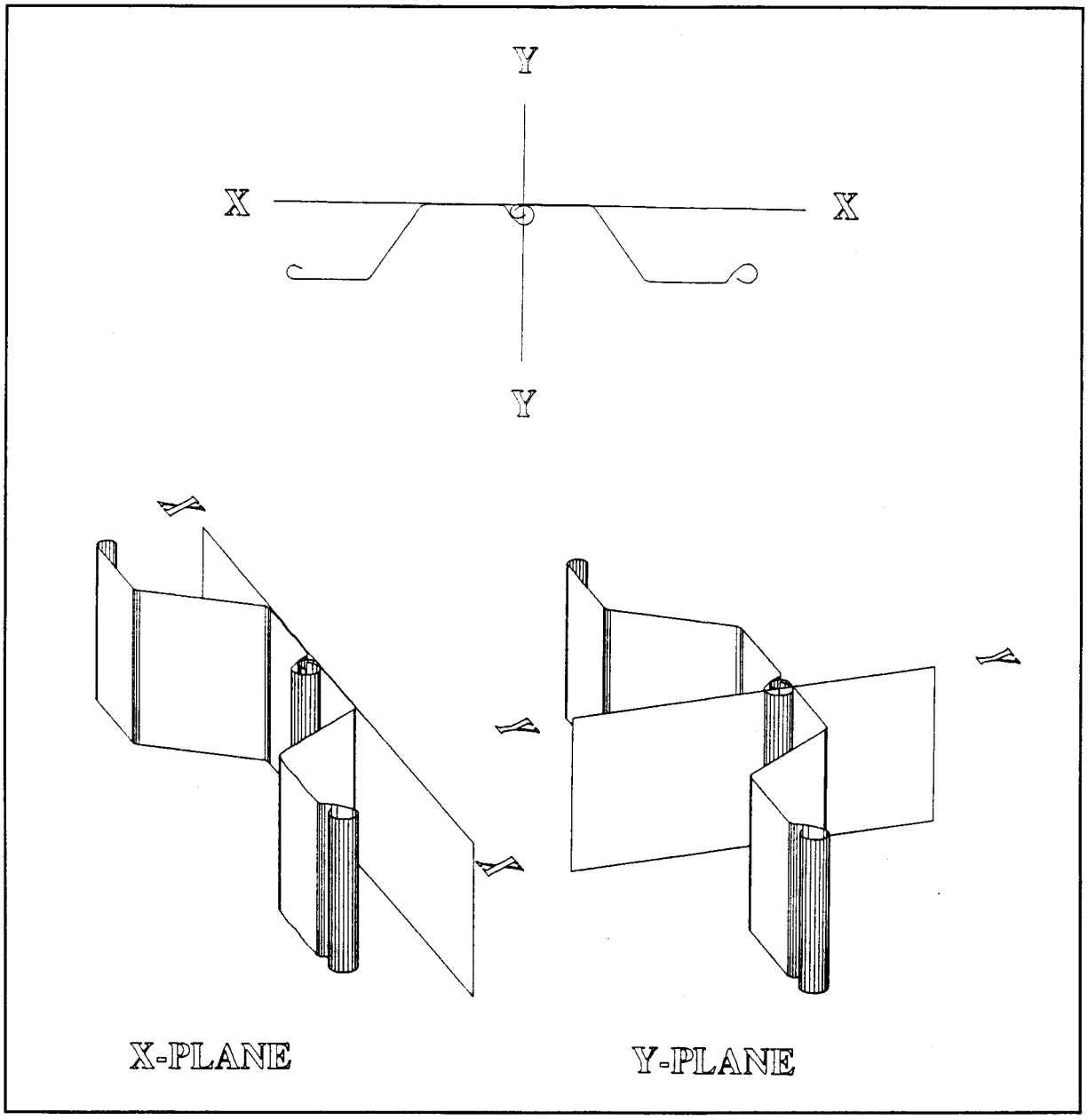

Figure 4: Waterloo Barrier™ Sheet Pile Axes

6.1.3 SEALABLE CAVITY INSPECTION

Inspection of the sealable cavities was the final stage of the Sheet Pile Installation QA/QC Program. Joint probing equipment was used to inspect the integrity of each of the WZ-75 sealable cavities. The joint probing was completed to determine if:

- the WZ-75 sheet piles were installed in such a manner that a sound sealable cavity existed.
- the sheet piling was installed to the minimum design depth outlined on the contract drawings.
- the sealable cavity was open for the full length of the sheet.

The following is a description of the documented items:

1) **DEPTH MEASUREMENT** - The depth of penetration of the inspection probe was recorded for each joint.

2) **CONDITION OF SEALABLE CAVITY** - Any unusual conditions encountered during the inspection of the sealable cavities were recorded. Documented conditions included the following:
   - Damage to the top of joint (from hammer).
   - Debris present at the base of the sealable cavity.
   - Obstructions/Restrictions present in the sealable cavity.

3) **INSPECTION REPORT** - Upon completion of the joint inspection, the client's Project Manager was presented with an inspection record for the sealable cavities. The Project Manager then determined what remedial action (if any) was required to correct deficiencies and approved the initiation of joint sealing.

6.2. SEALANT INSTALLATION PROCEDURES

6.2.1 SEALANT MIXING

The following is a point-form description of the sealant mixing:

1) **WATER METERING** - Approximately 15 litres of clean, potable water was added to the mixer.

2) **SEALANT ADDITION** - The sealant material was provided in pre-measured (30 kg) bags and two bags were slowly added to the mixing tank to allow for uniform mixing.

3) **MIXING TIME** - Upon addition of the sealant, mixing was carried out for approximately 3 minutes.

4) **MATERIAL TESTING** - Random Flow Cone tests were conducted to ensure that sealant met viscosity requirements.

6.2.2 JOINT GROUTING

The following inspection items were documented during the sealant installation:

1) **JOINT FLUSHING** - A high pressure water pump, water tank and rigid hose was used to remove any loose material from the sealable cavities. Flushing was conducted until the return water became clear (Photo 4). The flushing procedure was continued until a sufficient number of joints (20) were cleaned to allow for the installation of sealant.

2) **INITIAL VOLUME MEASUREMENT** - The sealant level in the holding tank of the grout plant was measured and recorded prior to the start of injection.

3) **SEALANT INJECTION** - The grout line was inserted to the base of the clean joint and the sealant was tremied into the cavity.

4) **GROUT LINE WITHDRAWAL** - Once sealant was observed to be flowing out the top of the sealable cavity (Photo 5), the injection line was slowly withdrawn.

5) **FINAL VOLUME MEASUREMENT** - Once the grout line had been removed from the joint the sealant level in the holding tank was measured and recorded.

6) **JOINT GROUTING** - Steps 3 - 7 were repeated for each joint to be sealed.

Photo 4: Typical Joint Flushing

Photo 5: Sealant Injection

7.0 VENUS MINE SITE - PROJECT RECORDS

The following appendices contain data collected during the Sheet Pile Installation phase of the project. Information is provided in tabular form as follows:

- **APPENDIX A:** Visual Inspection Report.
- **APPENDIX B:** Sheet Pile Driving Summary.
- **APPENDIX C:** Joint Inspection Summary.

Additionally:

- **APPENDIX E:** Sheet Pile Driving Logs.

The following appendices contain data collected during the Sealant Installation phase of the project. Information is provided in tabular form as follows:

- **APPENDIX D:** Sealant Installation Logs.

7.1 WATERLOO BARRIER™ LAYOUT

The wall was installed along the south and east sides of the former tailings pond as indicated on D.P.W. project drawing #1. The sheet pile identification numbers used in this report started at the south west end of the wall (#1) and finished at the north east end of the wall (#342).

7.2 SEALANT QUANTITIES

Figure 5 illustrates a cross-section of the sealable cavity provided by the Waterloo Barrier™ WZ-75 section used to construct the sheet pile cutoff wall. The typical cross-sectional area of this section is approximately 1.13×10^{-3} square metres or 1.22×10^{-2} square feet. Based on this, the minimum theoretical sealant volumes required for the following joint lengths would be:

SHEET PILE LENGTH (m)	SEALANT VOLUME (m^3)	SEALANT VOLUME (Litres)	SEALANT VOLUME (C.F.)
7.31	8.26×10^{-3}	8.26	0.291
5.33	6.02×10^{-3}	6.02	0.213
4.11	4.64×10^{-3}	4.64	0.164
3.66	4.14×10^{-3}	4.14	0.146
2.59	2.93×10^{-3}	2.93	0.103

A number of factors affect the actual volume of grout required to seal the joint cavities. They include:

- Porosity of the surrounding media.
- Contact area of the interlocking joints.
- The presence of subsurface voids adjacent to the interlocking joints.
- Consolidation of the native materials during sheet installation.
- Preferential flow paths along the sheet piling to adjacent sealable cavities.
- The effect of extensive flushing to remove obstructions in the sealable cavity.
- Increased porosity of the surrounding media due to excavating activities.
- Sealant over-run during grout line removal.

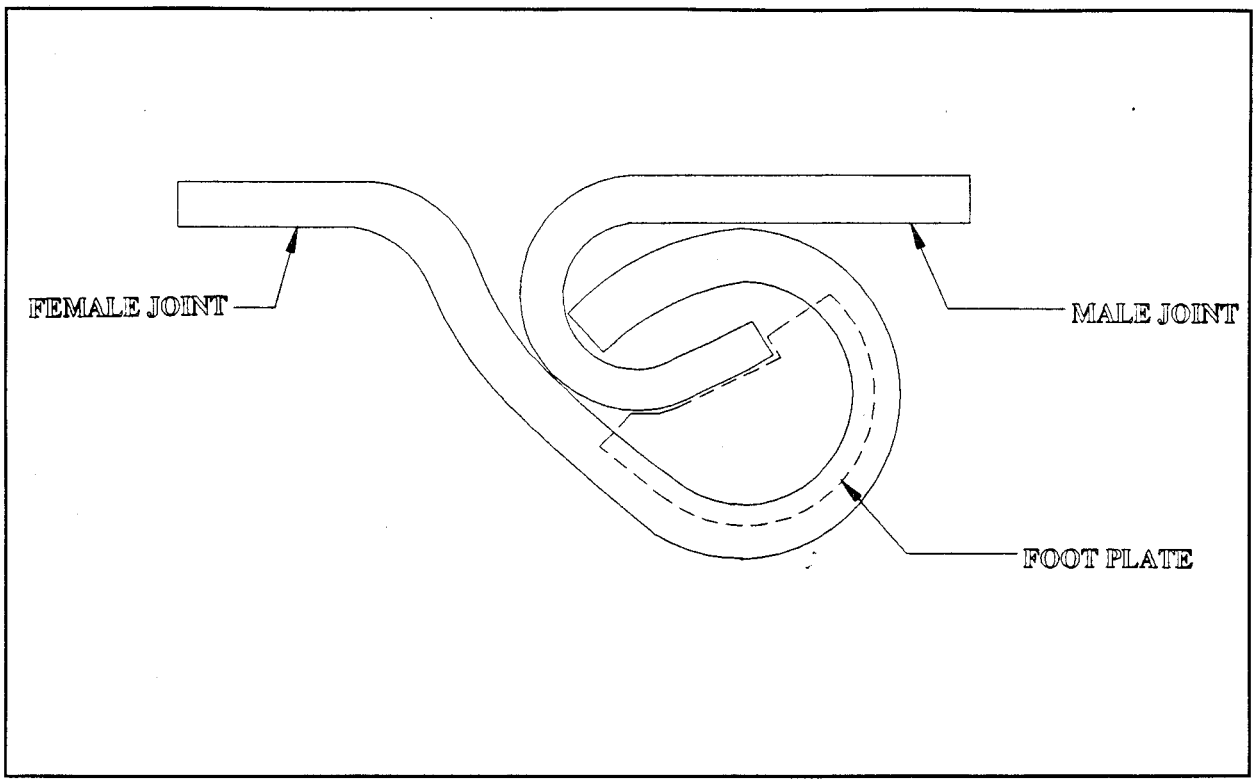

Figure 5: Sealable Cavity Cross-Section

7.3 DISCUSSION

Approximately 208 linear metres of Waterloo Barrier™ WZ-75 sheet piling was installed at the Venus Mine Site, in varying depths, as indicated in the project records (Appendices A-E). In general, the sheet piling was installed to the refusal depth noted in J.R. Paine & Associates Ltd. July 19th & 20th borehole logs used for wall depth calculations. However, some isolated difficulties were encountered during construction and these items have been outlined below.

A layer of random boulders varying in size from 0.3-1.5 metres was encountered throughout the site at a depth of approximately 1.0-3.5 metres below grade. To prevent damage to the sheet piling, an excavator was used to remove these boulders from the path of the wall. Excavation work started from pile #48, with the depth of excavation varying with the bottom of the obstructing layer.

A 600mm corrugated metal culvert, which actively drains the Klondike Highway road-base, was encountered running through the tailings pond at piles #27 & 28. These piles were driven to refusal and a opening was cut through the wall. The damaged section of culvert was replaced and connected to the existing line with standard metal collars. A concrete bulkhead was constructed on both sides of the affected sheet piles to prevent groundwater flow through the wall opening.

Heavily fractured and/or weathered bedrock was encountered at the refusal/cutoff depth of piles #185-205 and piles #247-342. Attempts were made to dig to the design depth in order to ensure contact with competent bedrock. During the sealing operation, additional grout was injected into this area in an attempt to increase grout flow below the sheet piling and into any rock fractures.

Due to repeated attempts to drive the sheet piling, between piles #19-50, past initial refusal and to design depth, joint #30 was damaged. Adjacent to joint # 30 additional work was conducted to excavate the area and backfill and compact with native clay.

Based upon the results of C3 Environmental's QA/QC inspection, the Waterloo Barrier™ Cut-off Wall installation conformed to procedures and specifications necessary to provide a very low permeability barrier.

APPENDIX A: VISUAL INSPECTION REPORT

Table 3 contains the results of the visual inspection that was performed by the Quality Assurance Engineer prior to installation of the WZ-75 sheet piles. Table 3 documents the following information:

- Pile Identification Number.
- Surface Condition.
- Sheet Pile Length.
- Sheet Pile Linearity.
- Foot Plate Condition.
- Sheet Pile Thickness.

VISUAL INSPECTION SUMMARY

OLD VENUS MINE SITE, CARCROSS, YUKON TERRITORY
WATERLOO BARRIER SYSTEM

Pile ID #	Surface Condition	Length (m)	Linearity	Foot Plate Condition	Pile Thickness (mm)
1	Acceptable	4.11	Acceptable	Acceptable	7.5
2	Acceptable	4.11	Acceptable	Acceptable	7.5
3	Acceptable	4.11	Acceptable	Acceptable	7.5
4	Acceptable	4.11	Acceptable	Acceptable	7.5
5	Acceptable	4.11	Acceptable	Acceptable	7.5
6	Acceptable	4.11	Acceptable	Acceptable	7.5
7	Acceptable	3.66	Acceptable	Acceptable	7.5
8	Acceptable	3.66	Acceptable	Acceptable	7.5
9	Acceptable	3.66	Acceptable	Acceptable	7.5
10	Acceptable	3.66	Acceptable	Acceptable	7.5
11	Acceptable	3.66	Acceptable	Acceptable	7.5
12	Acceptable	3.66	Acceptable	Acceptable	7.5
13	Acceptable	3.66	Acceptable	Acceptable	7.5
14	Acceptable	3.66	Acceptable	Acceptable	7.5
15	Acceptable	3.66	Acceptable	Acceptable	7.5
16	Acceptable	3.66	Acceptable	Acceptable	7.5
17	Acceptable	3.66	Acceptable	Acceptable	7.5
18	Acceptable	3.66	Acceptable	Acceptable	7.5
19	Acceptable	7.31	Acceptable	Acceptable	7.5
20	Acceptable	7.31	Acceptable	Acceptable	7.5
21	Acceptable	7.31	Acceptable	Acceptable	7.5
22	Acceptable	7.31	Acceptable	Acceptable	7.5
23	Acceptable	7.31	Acceptable	Acceptable	7.5
24	Acceptable	7.31	Acceptable	Acceptable	7.5
25	Acceptable	7.31	Acceptable	Acceptable	7.5
26	Acceptable	7.31	Acceptable	Acceptable	7.5
27	Acceptable	7.31	Acceptable	Acceptable	7.5
28	Acceptable	7.31	Acceptable	Acceptable	7.5
29	Acceptable	7.31	Acceptable	Acceptable	7.5
30	Acceptable	7.31	Acceptable	Acceptable	7.5
31	Acceptable	7.31	Acceptable	Acceptable	7.5
32	Acceptable	7.31	Acceptable	Acceptable	7.5
33	Acceptable	7.31	Acceptable	Acceptable	7.5
34	Acceptable	7.31	Acceptable	Acceptable	7.5
35	Acceptable	7.31	Acceptable	Acceptable	7.5
36	Acceptable	7.31	Acceptable	Acceptable	7.5
37	Acceptable	7.31	Acceptable	Acceptable	7.5
38	Acceptable	7.31	Acceptable	Acceptable	7.5
39	Acceptable	7.31	Acceptable	Acceptable	7.5
40	Acceptable	7.31	Acceptable	Acceptable	7.5

VISUAL INSPECTION SUMMARY

OLD VENUS MINE SITE, CARCROSS, YUKON TERRITORY
WATERLOO BARRIER SYSTEM

Pile ID #	Surface Condition	Length (m)	Linearity	Foot Plate Condition	Pile Thickness (mm)
41	Acceptable	7.31	Acceptable	Acceptable	7.5
42	Acceptable	7.31	Acceptable	Acceptable	7.5
43	Acceptable	7.31	Acceptable	Acceptable	7.5
44	Acceptable	7.31	Acceptable	Acceptable	7.5
45	Acceptable	7.31	Acceptable	Acceptable	7.5
46	Acceptable	7.31	Acceptable	Acceptable	7.5
47	Acceptable	7.31	Acceptable	Acceptable	7.5
48	Acceptable	7.31	Acceptable	Acceptable	7.5
49	Acceptable	7.31	Acceptable	Acceptable	7.5
50	Acceptable	7.31	Acceptable	Acceptable	7.5
51	Acceptable	7.31	Acceptable	Acceptable	7.5
52	Acceptable	7.31	Acceptable	Acceptable	7.5
53	Acceptable	7.31	Acceptable	Acceptable	7.5
54	Acceptable	7.31	Acceptable	Acceptable	7.5
55	Acceptable	7.31	Acceptable	Acceptable	7.5
56	Acceptable	7.31	Acceptable	Acceptable	7.5
57	Acceptable	7.31	Acceptable	Acceptable	7.5
58	Acceptable	7.31	Acceptable	Acceptable	7.5
59	Acceptable	7.31	Acceptable	Acceptable	7.5
60	Acceptable	7.31	Acceptable	Acceptable	7.5
61	Acceptable	7.31	Acceptable	Acceptable	7.5
62	Acceptable	7.31	Acceptable	Acceptable	7.5
63	Acceptable	7.31	Acceptable	Acceptable	7.5
64	Acceptable	7.31	Acceptable	Acceptable	7.5
65	Acceptable	7.31	Acceptable	Acceptable	7.5
66	Acceptable	7.31	Acceptable	Acceptable	7.5
67	Acceptable	7.31	Acceptable	Acceptable	7.5
68	Acceptable	7.31	Acceptable	Acceptable	7.5
69	Acceptable	7.31	Acceptable	Acceptable	7.5
70	Acceptable	7.31	Acceptable	Acceptable	7.5
71	Acceptable	7.31	Acceptable	Acceptable	7.5
72	Acceptable	7.31	Acceptable	Acceptable	7.5
73	Acceptable	7.31	Acceptable	Acceptable	7.5
74	Acceptable	7.31	Acceptable	Acceptable	7.5
75	Acceptable	7.31	Acceptable	Acceptable	7.5
76	Acceptable	7.31	Acceptable	Acceptable	7.5
77	Acceptable	7.31	Acceptable	Acceptable	7.5
78	Acceptable	7.31	Acceptable	Acceptable	7.5
79	Acceptable	7.31	Acceptable	Acceptable	7.5
80	Acceptable	7.31	Acceptable	Acceptable	7.5

VISUAL INSPECTION SUMMARY

OLD VENUS MINE SITE, CARCROSS, YUKON TERRITORY
WATERLOO BARRIER SYSTEM

Pile ID #	Surface Condition	Length (m)	Linearity	Foot Plate Condition	Pile Thickness (mm)
81	Acceptable	7.31	Acceptable	Acceptable	7.5
82	Acceptable	7.31	Acceptable	Acceptable	7.5
83	Acceptable	7.31	Acceptable	Acceptable	7.5
84	Acceptable	7.31	Acceptable	Acceptable	7.5
85	Acceptable	7.31	Acceptable	Acceptable	7.5
86	Acceptable	7.31	Acceptable	Acceptable	7.5
87	Acceptable	7.31	Acceptable	Acceptable	7.5
88	Acceptable	7.31	Acceptable	Acceptable	7.5
89	Acceptable	7.31	Acceptable	Acceptable	7.5
90	Acceptable	7.31	Acceptable	Acceptable	7.5
91	Acceptable	7.31	Acceptable	Acceptable	7.5
92	Acceptable	7.31	Acceptable	Acceptable	7.5
93	Acceptable	7.31	Acceptable	Acceptable	7.5
94	Acceptable	7.31	Acceptable	Acceptable	7.5
95	Acceptable	7.31	Acceptable	Acceptable	7.5
96	Acceptable	7.31	Acceptable	Acceptable	7.5
97	Acceptable	7.31	Acceptable	Acceptable	7.5
98	Acceptable	7.31	Acceptable	Acceptable	7.5
99	Acceptable	7.31	Acceptable	Acceptable	7.5
100	Acceptable	7.31	Acceptable	Acceptable	7.5
101	Acceptable	7.31	Acceptable	Acceptable	7.5
102	Acceptable	7.31	Acceptable	Acceptable	7.5
103	Acceptable	7.31	Acceptable	Acceptable	7.5
104	Acceptable	7.31	Acceptable	Acceptable	7.5
105	Acceptable	7.31	Acceptable	Acceptable	7.5
106	Acceptable	7.31	Acceptable	Acceptable	7.5
107	Acceptable	7.31	Acceptable	Acceptable	7.5
108	Acceptable	7.31	Acceptable	Acceptable	7.5
109	Acceptable	7.31	Acceptable	Acceptable	7.5
110	Acceptable	7.31	Acceptable	Acceptable	7.5
111	Acceptable	7.31	Acceptable	Acceptable	7.5
112	Acceptable	7.31	Acceptable	Acceptable	7.5
113	Acceptable	7.31	Acceptable	Acceptable	7.5
114	Acceptable	7.31	Acceptable	Acceptable	7.5
115	Acceptable	7.31	Acceptable	Acceptable	7.5
116	Acceptable	7.31	Acceptable	Acceptable	7.5
117	Acceptable	7.31	Acceptable	Acceptable	7.5
118	Acceptable	7.31	Acceptable	Acceptable	7.5
119	Acceptable	7.31	Acceptable	Acceptable	7.5
120	Acceptable	7.31	Acceptable	Acceptable	7.5

VISUAL INSPECTION SUMMARY

OLD VENUS MINE SITE, CARCROSS, YUKON TERRITORY
WATERLOO BARRIER SYSTEM

Pile ID #	Surface Condition	Length (m)	Linearity	Foot Plate Condition	Pile Thickness (mm)
121	Acceptable	7.31	Acceptable	Acceptable	7.5
122	Acceptable	7.31	Acceptable	Acceptable	7.5
123	Acceptable	7.31	Acceptable	Acceptable	7.5
124	Acceptable	7.31	Acceptable	Acceptable	7.5
125	Acceptable	7.31	Acceptable	Acceptable	7.5
126	Acceptable	7.31	Acceptable	Acceptable	7.5
127	Acceptable	7.31	Acceptable	Acceptable	7.5
128	Acceptable	7.31	Acceptable	Acceptable	7.5
129	Acceptable	7.31	Acceptable	Acceptable	7.5
130	Acceptable	7.31	Acceptable	Acceptable	7.5
131	Acceptable	7.31	Acceptable	Acceptable	7.5
132	Acceptable	7.31	Acceptable	Acceptable	7.5
133	Acceptable	7.31	Acceptable	Acceptable	7.5
134	Acceptable	7.31	Acceptable	Acceptable	7.5
135	Acceptable	7.31	Acceptable	Acceptable	7.5
136	Acceptable	7.31	Acceptable	Acceptable	7.5
137	Acceptable	7.31	Acceptable	Acceptable	7.5
138	Acceptable	7.31	Acceptable	Acceptable	7.5
139	Acceptable	7.31	Acceptable	Acceptable	7.5
140	Acceptable	7.31	Acceptable	Acceptable	7.5
141	Acceptable	7.31	Acceptable	Acceptable	7.5
142	Acceptable	7.31	Acceptable	Acceptable	7.5
143	Acceptable	7.31	Acceptable	Acceptable	7.5
144	Acceptable	7.31	Acceptable	Acceptable	7.5
145	Acceptable	7.31	Acceptable	Acceptable	7.5
146	Acceptable	7.31	Acceptable	Acceptable	7.5
147	Acceptable	7.31	Acceptable	Acceptable	7.5
148	Acceptable	7.31	Acceptable	Acceptable	7.5
149	Acceptable	7.31	Acceptable	Acceptable	7.5
150	Acceptable	7.31	Acceptable	Acceptable	7.5
151	Acceptable	7.31	Acceptable	Acceptable	7.5
152	Acceptable	7.31	Acceptable	Acceptable	7.5
153	Acceptable	7.31	Acceptable	Acceptable	7.5
154	Acceptable	7.31	Acceptable	Acceptable	7.5
155	Acceptable	7.31	Acceptable	Acceptable	7.5
156	Acceptable	7.31	Acceptable	Acceptable	7.5
157	Acceptable	7.31	Acceptable	Acceptable	7.5
158	Acceptable	7.31	Acceptable	Acceptable	7.5
159	Acceptable	7.31	Acceptable	Acceptable	7.5
160	Acceptable	7.31	Acceptable	Acceptable	7.5

VISUAL INSPECTION SUMMARY

OLD VENUS MINE SITE, CARCROSS, YUKON TERRITORY
WATERLOO BARRIER SYSTEM

Pile ID #	Surface Condition	Length (m)	Linearity	Foot Plate Condition	Pile Thickness (mm)
161	Acceptable	7.31	Acceptable	Acceptable	7.5
162	Acceptable	7.31	Acceptable	Acceptable	7.5
163	Acceptable	7.31	Acceptable	Acceptable	7.5
164	Acceptable	7.31	Acceptable	Acceptable	7.5
165	Acceptable	7.31	Acceptable	Acceptable	7.5
166	Acceptable	7.31	Acceptable	Acceptable	7.5
167	Acceptable	7.31	Acceptable	Acceptable	7.5
168	Acceptable	7.31	Acceptable	Acceptable	7.5
169	Acceptable	7.31	Acceptable	Acceptable	7.5
170	Acceptable	7.31	Acceptable	Acceptable	7.5
171	Acceptable	7.31	Acceptable	Acceptable	7.5
172	Acceptable	7.31	Acceptable	Acceptable	7.5
173	Acceptable	7.31	Acceptable	Acceptable	7.5
174	Acceptable	7.31	Acceptable	Acceptable	7.5
175	Acceptable	7.31	Acceptable	Acceptable	7.5
176	Acceptable	7.31	Acceptable	Acceptable	7.5
177	Acceptable	7.31	Acceptable	Acceptable	7.5
178	Acceptable	7.31	Acceptable	Acceptable	7.5
179	Acceptable	7.31	Acceptable	Acceptable	7.5
180	Acceptable	7.31	Acceptable	Acceptable	7.5
181	Acceptable	5.33	Acceptable	Acceptable	7.5
182	Acceptable	5.33	Acceptable	Acceptable	7.5
183	Acceptable	5.33	Acceptable	Acceptable	7.5
184	Acceptable	5.33	Acceptable	Acceptable	7.5
185	Acceptable	5.33	Acceptable	Acceptable	7.5
186	Acceptable	5.33	Acceptable	Acceptable	7.5
187	Acceptable	5.33	Acceptable	Acceptable	7.5
188	Acceptable	5.33	Acceptable	Acceptable	7.5
189	Acceptable	5.33	Acceptable	Acceptable	7.5
190	Acceptable	5.33	Acceptable	Acceptable	7.5
191	Acceptable	5.33	Acceptable	Acceptable	7.5
192	Acceptable	5.33	Acceptable	Acceptable	7.5
193	Acceptable	5.33	Acceptable	Acceptable	7.5
194	Acceptable	5.33	Acceptable	Acceptable	7.5
195	Acceptable	5.33	Acceptable	Acceptable	7.5
196	Acceptable	5.33	Acceptable	Acceptable	7.5
197	Acceptable	5.33	Acceptable	Acceptable	7.5
198	Acceptable	5.33	Acceptable	Acceptable	7.5
199	Acceptable	5.33	Acceptable	Acceptable	7.5
200	Acceptable	5.33	Acceptable	Acceptable	7.5

VISUAL INSPECTION SUMMARY

OLD VENUS MINE SITE, CARCROSS, YUKON TERRITORY
WATERLOO BARRIER SYSTEM

Pile ID #	Surface Condition	Length (m)	Linearity	Foot Plate Condition	Pile Thickness (mm)
201	Acceptable	5.33	Acceptable	Acceptable	7.5
202	Acceptable	5.33	Acceptable	Acceptable	7.5
203	Acceptable	5.33	Acceptable	Acceptable	7.5
204	Acceptable	5.33	Acceptable	Acceptable	7.5
205	Acceptable	5.33	Acceptable	Acceptable	7.5
206	Acceptable	5.33	Acceptable	Acceptable	7.5
207	Acceptable	5.33	Acceptable	Acceptable	7.5
208	Acceptable	5.33	Acceptable	Acceptable	7.5
209	Acceptable	5.33	Acceptable	Acceptable	7.5
210	Acceptable	5.33	Acceptable	Acceptable	7.5
211	Acceptable	3.66	Acceptable	Acceptable	7.5
212	Acceptable	3.66	Acceptable	Acceptable	7.5
213	Acceptable	3.66	Acceptable	Acceptable	7.5
214	Acceptable	3.66	Acceptable	Acceptable	7.5
215	Acceptable	3.66	Acceptable	Acceptable	7.5
216	Acceptable	3.66	Acceptable	Acceptable	7.5
217	Acceptable	2.59	Acceptable	Acceptable	7.5
218	Acceptable	2.59	Acceptable	Acceptable	7.5
219	Acceptable	2.59	Acceptable	Acceptable	7.5
220	Acceptable	2.59	Acceptable	Acceptable	7.5
221	Acceptable	2.59	Acceptable	Acceptable	7.5
222	Acceptable	2.59	Acceptable	Acceptable	7.5
223	Acceptable	2.59	Acceptable	Acceptable	7.5
224	Acceptable	2.59	Acceptable	Acceptable	7.5
225	Acceptable	2.59	Acceptable	Acceptable	7.5
226	Acceptable	2.59	Acceptable	Acceptable	7.5
227	Acceptable	2.59	Acceptable	Acceptable	7.5
228	Acceptable	2.59	Acceptable	Acceptable	7.5
229	Acceptable	2.59	Acceptable	Acceptable	7.5
230	Acceptable	2.59	Acceptable	Acceptable	7.5
231	Acceptable	2.59	Acceptable	Acceptable	7.5
232	Acceptable	2.59	Acceptable	Acceptable	7.5
233	Acceptable	2.59	Acceptable	Acceptable	7.5
234	Acceptable	2.59	Acceptable	Acceptable	7.5
235	Acceptable	2.59	Acceptable	Acceptable	7.5
236	Acceptable	2.59	Acceptable	Acceptable	7.5
237	Acceptable	2.59	Acceptable	Acceptable	7.5
238	Acceptable	2.59	Acceptable	Acceptable	7.5
239	Acceptable	2.59	Acceptable	Acceptable	7.5
240	Acceptable	2.59	Acceptable	Acceptable	7.5

VISUAL INSPECTION SUMMARY

OLD VENUS MINE SITE, CARCROSS, YUKON TERRITORY
WATERLOO BARRIER SYSTEM

Pile ID #	Surface Condition	Length (m)	Linearity	Foot Plate Condition	Pile Thickness (mm)
241	Acceptable	2.59	Acceptable	Acceptable	7.5
242	Acceptable	2.59	Acceptable	Acceptable	7.5
243	Acceptable	2.59	Acceptable	Acceptable	7.5
244	Acceptable	2.59	Acceptable	Acceptable	7.5
245	Acceptable	2.59	Acceptable	Acceptable	7.5
246	Acceptable	2.59	Acceptable	Acceptable	7.5
247	Acceptable	3.66	Acceptable	Acceptable	7.5
248	Acceptable	3.66	Acceptable	Acceptable	7.5
249	Acceptable	3.66	Acceptable	Acceptable	7.5
250	Acceptable	3.66	Acceptable	Acceptable	7.5
251	Acceptable	3.66	Acceptable	Acceptable	7.5
252	Acceptable	3.66	Acceptable	Acceptable	7.5
253	Acceptable	3.66	Acceptable	Acceptable	7.5
254	Acceptable	3.66	Acceptable	Acceptable	7.5
255	Acceptable	3.66	Acceptable	Acceptable	7.5
256	Acceptable	3.66	Acceptable	Acceptable	7.5
257	Acceptable	3.66	Acceptable	Acceptable	7.5
258	Acceptable	3.66	Acceptable	Acceptable	7.5
259	Acceptable	3.66	Acceptable	Acceptable	7.5
260	Acceptable	3.66	Acceptable	Acceptable	7.5
261	Acceptable	3.66	Acceptable	Acceptable	7.5
262	Acceptable	3.66	Acceptable	Acceptable	7.5
263	Acceptable	3.66	Acceptable	Acceptable	7.5
264	Acceptable	3.66	Acceptable	Acceptable	7.5
265	Acceptable	4.11	Acceptable	Acceptable	7.5
266	Acceptable	4.11	Acceptable	Acceptable	7.5
267	Acceptable	4.11	Acceptable	Acceptable	7.5
268	Acceptable	4.11	Acceptable	Acceptable	7.5
269	Acceptable	4.11	Acceptable	Acceptable	7.5
270	Acceptable	4.11	Acceptable	Acceptable	7.5
271	Acceptable	4.11	Acceptable	Acceptable	7.5
272	Acceptable	4.11	Acceptable	Acceptable	7.5
273	Acceptable	4.11	Acceptable	Acceptable	7.5
274	Acceptable	4.11	Acceptable	Acceptable	7.5
275	Acceptable	4.11	Acceptable	Acceptable	7.5
276	Acceptable	4.11	Acceptable	Acceptable	7.5
277	Acceptable	4.11	Acceptable	Acceptable	7.5
278	Acceptable	4.11	Acceptable	Acceptable	7.5
279	Acceptable	4.11	Acceptable	Acceptable	7.5
280	Acceptable	4.11	Acceptable	Acceptable	7.5

VISUAL INSPECTION SUMMARY

OLD VENUS MINE SITE, CARCROSS, YUKON TERRITORY
WATERLOO BARRIER SYSTEM

Pile ID #	Surface Condition	Length (m)	Linearity	Foot Plate Condition	Pile Thickness (mm)
281	Acceptable	4.11	Acceptable	Acceptable	7.5
282	Acceptable	4.11	Acceptable	Acceptable	7.5
283	Acceptable	4.11	Acceptable	Acceptable	7.5
284	Acceptable	4.11	Acceptable	Acceptable	7.5
285	Acceptable	4.11	Acceptable	Acceptable	7.5
286	Acceptable	4.11	Acceptable	Acceptable	7.5
287	Acceptable	4.11	Acceptable	Acceptable	7.5
288	Acceptable	4.11	Acceptable	Acceptable	7.5
289	Acceptable	4.11	Acceptable	Acceptable	7.5
290	Acceptable	4.11	Acceptable	Acceptable	7.5
291	Acceptable	4.11	Acceptable	Acceptable	7.5
292	Acceptable	4.11	Acceptable	Acceptable	7.5
293	Acceptable	4.11	Acceptable	Acceptable	7.5
294	Acceptable	4.11	Acceptable	Acceptable	7.5
295	Acceptable.	4.11	Acceptable	Acceptable	7.5
296	Acceptable	4.11	Acceptable	Acceptable	7.5
297	Acceptable	4.11	Acceptable	Acceptable	7.5
298	Acceptable	4.11	Acceptable	Acceptable	7.5
299	Acceptable	4.11	Acceptable	Acceptable	7.5
300	Acceptable	4.11	Acceptable	Acceptable	7.5
301	Acceptable	4.11	Acceptable	Acceptable	7.5
302	Acceptable	4.11	Acceptable	Acceptable	7.5
303	Acceptable	4.11	Acceptable	Acceptable	7.5
304	Acceptable	4.11	Acceptable	Acceptable	7.5
305	Acceptable	4.11	Acceptable	Acceptable	7.5
306	Acceptable	4.11	Acceptable	Acceptable	7.5
307	Acceptable	4.11	Acceptable	Acceptable	7.5
308	Acceptable	4.11	Acceptable	Acceptable	7.5
309	Acceptable	4.11	Acceptable	Acceptable	7.5
310	Acceptable	4.11	Acceptable	Acceptable	7.5
311	Acceptable	4.11	Acceptable	Acceptable	7.5
312	Acceptable	4.11	Acceptable	Acceptable	7.5
313	Acceptable	4.11	Acceptable	Acceptable	7.5
314	Acceptable	4.11	Acceptable	Acceptable	7.5
315	Acceptable	4.11	Acceptable	Acceptable	7.5
316	Acceptable	4.11	Acceptable	Acceptable	7.5
317	Acceptable	4.11	Acceptable	Acceptable	7.5
318	Acceptable	4.11	Acceptable	Acceptable	7.5
319	Acceptable	4.11	Acceptable	Acceptable	7.5
320	Acceptable	4.11	Acceptable	Acceptable	7.5

VISUAL INSPECTION SUMMARY

OLD VENUS MINE SITE, CARCROSS, YUKON TERRITORY
WATERLOO BARRIER SYSTEM

Pile ID #	Surface Condition	Length (m)	Linearity	Foot Plate Condition	Pile Thickness (mm)
321	Acceptable	4.11	Acceptable	Acceptable	7.5
322	Acceptable	4.11	Acceptable	Acceptable	7.5
323	Acceptable	4.11	Acceptable	Acceptable	7.5
324	Acceptable	4.11	Acceptable	Acceptable	7.5
325	Acceptable	4.11	Acceptable	Acceptable	7.5
326	Acceptable	4.11	Acceptable	Acceptable	7.5
327	Acceptable	4.11	Acceptable	Acceptable	7.5
328	Acceptable	4.11	Acceptable	Acceptable	7.5
329	Acceptable	4.11	Acceptable	Acceptable	7.5
330	Acceptable	4.11	Acceptable	Acceptable	7.5
331	Acceptable	4.11	Acceptable	Acceptable	7.5
332	Acceptable	4.11	Acceptable	Acceptable	7.5
333	Acceptable	4.11	Acceptable	Acceptable	7.5
334	Acceptable	4.11	Acceptable	Acceptable	7.5
335	Acceptable	4.11	Acceptable	Acceptable	7.5
336	Acceptable	4.11	Acceptable	Acceptable	7.5
337	Acceptable	4.11	Acceptable	Acceptable	7.5
338	Acceptable	4.11	Acceptable	Acceptable	7.5
339	Acceptable	4.11	Acceptable	Acceptable	7.5
340	Acceptable	4.11	Acceptable	Acceptable	7.5
341	Acceptable	4.11	Acceptable	Acceptable	7.5
342	Acceptable	4.11	Acceptable	Acceptable	7.5

APPENDIX B: SHEET PILE DRIVING SUMMARY

The results of the sheet pile driving inspection that was performed by the Quality Assurance Engineer is contained in Table 4. This table documents the following information:

- Pile Identification Number.
- Final Installation Date.
- Initial Pile Length.
- Final Pile Length.
- Top of Pile Elevation.
- Assumed Bottom of Pile Elevation.
- X-Axis Alignment.
- Y-Axis Alignment.

SHEET PILE DRIVING SUMMARY

OLD VENUS MINE SITE, CARCROSS, YUKON TERRITORY
WATERLOO BARRIER SYSTEM

Pile ID	Sheet Pile Length		Date	Plumbness		Sheet Elevation	
	Initial	Final		X-Axis	Y-Axis	Top	Bottom
1	4.11	3.54	17-Sep-95	89.3 S	87.1 W	83.10	79.56
2	4.11	3.64	17-Sep-95	89.2 S	87.8 W	83.10	79.46
3	4.11	3.64	17-Sep-95	88.8 S	87.5 W	83.10	79.46
4	4.11	3.50	17-Sep-95	90.0	88.2 W	83.10	79.60
5	4.11	3.60	17-Sep-95	89.0 S	88.6 W	83.10	79.50
6	4.11	3.60	17-Sep-95	89.6 S	88.0 W	83.10	79.50
7	3.66	3.04	3-Sep-95	88.3 S	87.7 W	83.10	80.06
8	3.66	2.92	3-Sep-95	89.1 N	90.0	83.10	80.18
9	3.66	3.49	3-Sep-95	89.0 S	89.6 E	83.10	79.61
10	3.66	3.23	3-Sep-95	87.0 S	89.5 E	83.10	79.87
11	3.66	3.50	3-Sep-95	86.4 S	89.6 W	83.10	79.60
12	3.66	3.49	3-Sep-95	88.2 S	90.0	83.10	79.61
13	3.66	3.47	3-Sep-95	88.1 S	89.3 W	83.10	79.63
14	3.66	3.48	3-Sep-95	87.8 S	89.6 E	83.10	79.62
15	3.66	3.47	3-Sep-95	88.0 S	89.4 W	83.10	79.63
16	3.66	3.48	3-Sep-95	88.4 S	89.7 E	83.10	79.62
17	3.66	3.48	3-Sep-95	88.0 S	89.8 E	83.10	79.62
18	3.66	3.48	3-Sep-95	90.0	89.0 E	83.10	79.62
19	7.31	6.25	3-Sep-95	88.8 S	89.2 E	83.10	76.85
20	7.31	5.57	3-Sep-95	87.7 S	89.1 E	83.10	77.53
21	7.31	5.96	3-Sep-95	86.9 S	89.8 W	83.10	77.14
22	7.31	6.02	3-Sep-95	87.0 S	89.4 E	83.10	77.08
23	7.31	6.32	3-Sep-95	87.3 S	89.2 W	83.10	76.78
24	7.31	6.49	3-Sep-95	88.2 N	90.0	83.10	76.61
25	7.31	6.44	3-Sep-95	88.8 N	89.8 E	83.10	76.66
26	7.31	6.48	3-Sep-95	89.6 S	89.3 W	83.10	76.62
27	7.31	7.13	3-Sep-95	88.4 S	89.2 W	83.10	75.97
28	7.31	7.03	3-Sep-95	88.9 N	90.0	83.10	76.07
29	7.31	7.04	3-Sep-95	89.9 S	89.6 E	83.10	76.06
30	7.31	5.89	3-Sep-95	86.8 N	89.3 E	83.10	77.21
31	7.31	5.63	3-Sep-95	89.6 N	88.5 E	83.10	77.47
32	7.31	6.06	3-Sep-95	89.5 S	88.6 E	83.10	77.04
33	7.31	5.85	3-Sep-95	89.1 S	88.8 E	83.10	77.25
34	7.31	6.28	3-Sep-95	88.8 S	89.1 E	83.10	76.82
35	7.31	5.96	3-Sep-95	89.9 N	90.0	83.10	77.14
36	7.31	6.63	3-Sep-95	89.7 E	89.9 N	83.10	76.47
37	7.31	6.63	3-Sep-95	87.3 E	89.6 N	83.10	76.47
38	7.31	6.63	3-Sep-95	89.8 W	88.5 N	83.10	76.47
39	7.31	6.63	3-Sep-95	89.7 W	88.8 N	83.10	76.47
40	7.31	6.91	3-Sep-95	89.6 E	88.8 N	83.10	76.19
41	7.31	7.06	3-Sep-95	89.8 E	89.3 N	83.10	76.04
42	7.31	6.53	3-Sep-95	89.8 E	89.4 N	83.10	76.57
43	7.31	6.80	4-Sep-95	89.4 E	89.7 N	83.10	76.30
44	7.31	6.36	4-Sep-95	88.7 E	89.7 S	83.10	76.74
45	7.31	6.94	4-Sep-95	90.0	89.7 S	83.10	76.17

SHEET PILE DRIVING SUMMARY

OLD VENUS MINE SITE, CARCROSS, YUKON TERRITORY
WATERLOO BARRIER SYSTEM

Pile	Sheet Pile Length		Date	Plumbness		Sheet Elevation	
ID	Initial	Final		X-Axis	Y-Axis	Top	Bottom
46	7.31	7.19	4-Sep-95	88.0 E	89.2 S	83.10	75.92
47	7.31	7.19	4-Sep-95	86.7 E	89.2 S	83.10	75.91
48	7.31	7.31	4-Sep-95	89.0 E	89.9 N	83.10	75.79
49	7.31	7.31	4-Sep-95	89.8 E	89.7 S	83.10	75.79
50	7.31	7.00	4-Sep-95	90.0	89.6 S	83.10	76.11
51	7.31	6.95	4-Sep-95	88.5 E	89.6 S	83.10	76.15
52	7.31	7.31	4-Sep-95	89.6 E	89.5 N	83.10	75.79
53	7.31	7.31	4-Sep-95	89.7 W	90.0	83.10	75.79
54	7.31	7.31	4-Sep-95	90.0	89.8 S	83.10	75.79
55	7.31	7.06	4-Sep-95	88.2 E	89.7 N	83.10	76.04
56	7.31	6.84	4-Sep-95	88.9 E	89.2 N	83.10	76.27
57	7.31	7.08	4-Sep-95	89.6 E	89.6 N	83.10	76.02
58	7.31	6.99	4-Sep-95	89.5 E	89.5 N	83.10	76.11
59	7.31	7.03	4-Sep-95	88.8 E	89.6 N	83.10	76.08
60	7.31	7.21	4-Sep-95	88.8 E	89.4 N	83.10	75.89
61	7.31	7.31	4-Sep-95	88.2 E	89.9 N	83.10	75.79
62	7.31	7.12	5-Sep-95	88.9 E	89.5 N	83.10	75.98
63	7.31	7.09	5-Sep-95	90.0	89.7 N	83.10	76.01
64	7.31	7.09	5-Sep-95	89.6 W	89.6 N	83.10	76.01
65	7.31	7.31	5-Sep-95	88.9 E	89.2 N	83.10	75.79
66	7.31	7.21	5-Sep-95	90.0	88.6 N	83.10	75.89
67	7.31	7.07	5-Sep-95	89.3 W	88.6 N	83.10	76.03
68	7.31	7.01	5-Sep-95	89.5 W	88.5 N	83.10	76.09
69	7.31	7.06	5-Sep-95	89.8 W	88.4 N	83.10	76.04
70	7.31	7.06	5-Sep-95	89.6 W	88.0 N	83.10	76.04
71	7.31	7.07	5-Sep-95	89.8 W	88.0 N	83.10	76.03
72	7.31	6.82	5-Sep-95	89.7 W	88.3 N	83.10	76.28
73	7.31	6.76	5-Sep-95	90.0	88.2 N	83.10	76.34
74	7.31	7.09	5-Sep-95	88.6 E	88.6 N	83.10	76.01
75	7.31	6.90	5-Sep-95	89.5 E	88.8 N	83.10	76.20
76	7.31	7.16	5-Sep-95	90.0	88.8 N	83.10	75.94
77	7.31	6.94	5-Sep-95	89.5 E	88.5 N	83.10	76.16
78	7.31	7.16	5-Sep-95	90.0	88.2 N	83.10	75.94
79	7.31	6.92	5-Sep-95	89.8 W	88.0 N	83.10	76.18
80	7.31	7.16	5-Sep-95	90.0	88.5 N	83.10	75.94
81	7.31	6.90	5-Sep-95	90.0	88.6 N	83.10	76.20
82	7.31	7.16	5-Sep-95	90.0	88.5 N	83.10	75.94
83	7.31	6.74	5-Sep-95	89.2 E	88.5 N	83.10	76.36
84	7.31	6.78	5-Sep-95	89.7 E	88.6 N	83.10	76.32
85	7.31	6.82	5-Sep-95	90.0	89.1 N	83.10	76.28
86	7.31	7.09	5-Sep-95	89.2 W	89.5 N	83.10	76.01
87	7.31	7.02	5-Sep-95	89.7 W	90.0	83.10	76.08
88	7.31	7.18	5-Sep-95	89.7 W	90.0	83.10	75.92
89	7.31	6.67	6-Sep-95	89.5 W	89.8 N	83.10	76.43
90	7.31	6.74	6-Sep-95	89.8 E	89.7 S	83.10	76.36

SHEET PILE DRIVING SUMMARY

OLD VENUS MINE SITE, CARCROSS, YUKON TERRITORY
WATERLOO BARRIER SYSTEM

Pile	Sheet Pile Length		Date	Plumbness		Sheet Elevation	
ID	Initial	Final		X-Axis	Y-Axis	Top	Bottom
91	7.31	7.02	6-Sep-95	89.7 E	89.7 S	83.10	76.08
92	7.31	7.06	6-Sep-95	89.8 E	90.0	83.10	76.04
93	7.31	7.02	6-Sep-95	89.3 E	89.8 S	83.10	76.08
94	7.31	7.13	6-Sep-95	89.9 N	89.2 N	83.10	75.97
95	7.31	7.21	6-Sep-95	88.8 N	89.6 N	83.10	75.89
96	7.31	7.06	6-Sep-95	89.8 W	89.5 S	83.10	76.04
97	7.31	6.92	6-Sep-95	89.8 W	89.6 S	83.10	76.18
98	7.31	7.01	6-Sep-95	89.8 E	90.0	83.10	76.09
99	7.31	6.93	6-Sep-95	90.0	89.8 N	83.10	76.17
100	7.31	7.07	6-Sep-95	89.8 W	89.2 N	83.10	76.03
101	7.31	7.09	6-Sep-95	89.4 W	89.4 N	83.10	76.01
102	7.31	7.20	6-Sep-95	89.8 W	89.1 N	83.10	75.90
103	7.31	7.19	6-Sep-95	90.0	89.1 N	83.10	75.91
104	7.31	7.19	6-Sep-95	89.8 E	89.2 N	83.10	75.91
105	7.31	7.15	6-Sep-95	89.7 W	89.5 N	83.10	75.95
106	7.31	7.13	6-Sep-95	89.9 W	89.6 N	83.10	75.97
107	7.31	7.06	6-Sep-95	89.2 W	89.6 N	83.10	76.04
108	7.31	7.12	6-Sep-95	89.8 W	89.5 N	83.10	75.98
109	7.31	7.10	6-Sep-95	88.8 W	90.0	83.10	76.00
110	7.31	7.09	6-Sep-95	89.6 W	89.1 S	83.10	76.01
111	7.31	6.90	6-Sep-95	89.4 E	89.1 S	83.10	76.20
112	7.31	7.14	6-Sep-95	89.3 N	89.6 S	83.10	75.96
113	7.31	7.19	6-Sep-95	89.8	89.8 S	83.10	75.91
114	7.31	7.31	6-Sep-95	89.0 W	89.8 N	83.10	75.79
115	7.31	7.16	6-Sep-95	89.7 E	89.4 N	83.10	75.94
116	7.31	7.29	6-Sep-95	89.7 W	89.3 N	83.10	75.81
117	7.31	7.28	6-Sep-95	88.8 E	89.0 N	83.10	75.82
118	7.31	7.31	7-Sep-95	88.6 W	89.0 N	83.10	75.79
119	7.31	6.85	7-Sep-95	90.0	89.4 N	83.10	76.25
120	7.31	7.26	7-Sep-95	89.8 W	89.8 N	83.10	75.84
121	7.31	7.12	7-Sep-95	89.3 E	89.2 N	83.10	75.98
122	7.31	7.26	7-Sep-95	89.9 W	89.3 N	83.10	75.84
123	7.31	7.00	7-Sep-95	89.4 E	89.5 N	83.10	76.10
124	7.31	7.25	7-Sep-95	89.5 E	88.8 N	83.10	75.85
125	7.31	7.27	7-Sep-95	88.7 W	89.2 N	83.10	75.83
126	7.31	7.25	7-Sep-95	89.7 E	89.5 S	83.10	75.85
127	7.31	7.26	7-Sep-95	90.0	89.7 N	83.10	75.84
128	7.31	7.23	7-Sep-95	89.7 E	89.7 S	83.10	75.87
129	7.31	7.21	7-Sep-95	89.5 W	89.9 S	83.10	75.89
130	7.31	7.20	7-Sep-95	89.8 W	90.0	83.10	75.90
131	7.31	7.10	7-Sep-95	90.0	89.8 N	83.10	76.00
132	7.31	7.17	7-Sep-95	89.8 W	89.8 S	83.10	75.93
133	7.31	7.15	7-Sep-95	89.6 E	89.8 N	83.10	75.95
134	7.31	7.15	7-Sep-95	89.5 E	89.8 S	83.10	75.95
135	7.31	7.15	7-Sep-95	89.5 W	89.8 N	83.10	75.95

SHEET PILE DRIVING SUMMARY

OLD VENUS MINE SITE, CARCROSS, YUKON TERRITORY
WATERLOO BARRIER SYSTEM

Pile ID	Sheet Pile Length		Date	Plumbness		Sheet Elevation	
	Initial	Final		X-Axis	Y-Axis	Top	Bottom
136	7.31	7.30	7-Sep-95	90.0	89.8 S	83.10	75.80
137	7.31	7.11	7-Sep-95	89.7 W	89.9 N	83.10	75.99
138	7.31	7.28	7-Sep-95	89.1 W	89.9 S	83.10	75.82
139	7.31	7.27	7-Sep-95	89.3 E	89.8 N	83.10	75.83
140	7.31	7.27	7-Sep-95	89.2 E	90.0	83.10	75.83
141	7.31	7.05	7-Sep-95	89.2 W	89.5 N	83.10	76.05
142	7.31	7.27	7-Sep-95	89.8 E	89.5 N	83.10	75.83
143	7.31	7.27	7-Sep-95	90.0	89.7 N	83.10	75.83
144	7.31	7.27	7-Sep-95	89.2 E	89.6 N	83.10	75.83
145	7.31	7.26	7-Sep-95	89.8 E	89.6 N	83.10	75.84
146	7.31	7.19	7-Sep-95	89.5 E	89.8 N	83.10	75.91
147	7.31	7.28	7-Sep-95	89.5 W	89.3 N	83.10	75.82
148	7.31	7.25	7-Sep-95	89.9 W	89.1 N	83.10	75.85
149	7.31	7.29	7-Sep-95	89.5 W	89.4 N	83.10	75.81
150	7.31	7.25	7-Sep-95	89.8 E	89.0 N	83.10	75.85
151	7.31	7.25	7-Sep-95	89.6 W	89.1 N	83.10	75.85
152	7.31	7.25	8-Sep-95	89.2 W	89.0 S	83.10	75.85
153	7.31	7.16	8-Sep-95	88.6 E	90.0	83.82	76.66
154	7.31	6.95	8-Sep-95	90.0	89.7 S	83.10	76.15
155	7.31	7.00	8-Sep-95	88.5 E	89.8 N	83.10	76.10
156	7.31	7.25	8-Sep-95	87.8 W	89.2 S	83.10	75.85
157	7.31	7.22	8-Sep-95	88.2 E	89.6 N	83.10	75.88
158	7.31	7.24	8-Sep-95	89.2 E	88.0 N	83.10	75.86
159	7.31	6.85	8-Sep-95	89.8 E	87.8 N	83.71	76.86
160	7.31	6.90	8-Sep-95	88.9 E	87.8 N	83.77	76.87
161	7.31	7.13	8-Sep-95	89.3 W	88.5 N	83.68	76.55
162	7.31	7.13	8-Sep-95	89.0 W	88.1 N	83.10	75.97
163	7.31	7.23	8-Sep-95	89.2 W	88.0 N	83.10	75.87
164	7.31	7.24	8-Sep-95	90.0	88.0 N	83.10	75.86
165	7.31	7.30	8-Sep-95	90.0	88.1 N	83.10	75.80
166	7.31	7.02	8-Sep-95	89.2 E	89.0 N	83.76	76.74
167	7.31	7.24	8-Sep-95	89.2 W	88.6 N	83.10	75.86
168	7.31	7.25	8-Sep-95	90.0	89.4 N	83.10	75.85
169	7.31	7.20	8-Sep-95	89.2 E	88.7 N	83.10	75.90
170	7.31	7.04	8-Sep-95	89.8 E	88.3 N	83.10	76.06
171	7.31	7.31	8-Sep-95	89.8 W	88.6 N	83.09	75.78
172	7.31	7.31	8-Sep-95	89.8 W	88.0 N	83.07	75.76
173	7.31	7.31	13-Sep-95	89.2 E	89.1 N	83.10	75.79
174	7.31	7.46	13-Sep-95	89.6 E	89.0 N	83.10	75.79
175	7.31	7.31	13-Sep-95	88.2 E	88.2 N	83.10	75.79
176	7.31	7.31	13-Sep-95	87.9 E	88.2 N	83.10	75.79
177	7.31	7.31	13-Sep-95	89.1 E	87.7 N	83.10	75.79
178	7.31	7.31	13-Sep-95	88.7 E	88.7 N	83.10	75.79
179	7.31	7.31	13-Sep-95	89.4 E	89.0 N	83.10	75.79
180	7.31	7.31	13-Sep-95	89.7 E	89.0 N	83.10	75.79

SHEET PILE DRIVING SUMMARY

OLD VENUS MINE SITE, CARCROSS, YUKON TERRITORY
WATERLOO BARRIER SYSTEM

Pile	Sheet Pile Length		Date	Plumbness		Sheet Elevation	
ID	Initial	Final		X-Axis	Y-Axis	Top	Bottom
181	5.33	5.33	13-Sep-95	88.9 E	89.2 N	83.10	77.77
182	5.33	5.33	13-Sep-95	87.7 E	89.6 N	83.10	77.77
183	5.33	5.33	13-Sep-95	87.5 E	88.9 N	83.10	77.77
184	5.33	5.33	13-Sep-95	86.5 E	88.6 N	83.10	77.77
185	5.33	5.33	13-Sep-95	86.5 E	89.7 N	83.10	77.77
186	5.33	5.33	13-Sep-95	86.5 E	89.4 N	83.10	77.77
187	5.33	5.33	13-Sep-95	87.4 E	89.7 N	83.10	77.77
188	5.33	5.33	13-Sep-95	89.1 E	89.5 N	83.10	77.77
189	5.33	5.33	13-Sep-95	89.0 W	90.0	83.10	77.77
190	5.33	5.33	14-Sep-95	88.5 E	89.4 S	83.10	77.77
191	5.33	5.33	14-Sep-95	88.2 W	89.8 S	83.10	77.77
192	5.33	4.87	14-Sep-95	87.8 W	89.7 S	83.10	78.23
193	5.33	4.80	14-Sep-95	88.8 W	89.5 S	83.10	78.30
194	5.33	4.80	14-Sep-95	89.6 W	89.5 S	83.10	78.30
195	5.33	4.82	14-Sep-95	89.8 E	89.7 S	83.10	78.28
196	5.33	4.67	14-Sep-95	88.3 E	89.7 S	83.10	78.43
197	5.33	4.67	14-Sep-95	87.9 E	89.1 S	83.10	78.43
198	5.33	4.67	14-Sep-95	87.1 E	89.8 N	83.10	78.43
199	5.33	4.31	14-Sep-95	87.0 E	89.8 N	83.10	78.79
200	5.33	3.98	14-Sep-95	85.9 E	88.9 N	83.10	79.12
201	5.33	3.48	14-Sep-95	86.3 E	89.7 N	83.10	79.62
202	5.33	3.50	14-Sep-95	86.8 E	88.3 N	83.10	79.60
203	5.33	3.60	14-Sep-95	87.5 E	89.8 N	83.10	79.50
204	5.33	3.55	14-Sep-95	88.5 E	88.5 N	83.10	79.55
205	5.33	3.22	14-Sep-95	88.7 E	89.2 N	83.10	79.88
206	5.33	2.82	14-Sep-95	89.6 E	88.9 N	83.10	80.28
207	5.33	2.61	14-Sep-95	89.4 W	88.7 N	83.10	80.49
208	5.33	2.59	14-Sep-95	89.6 W	89.4 N	83.10	80.51
209	5.33	2.49	14-Sep-95	89.7 W	88.7 N	83.10	80.61
210	5.33	2.03	14-Sep-95	89.9 E	88.8 N	83.10	81.07
211	3.66	1.98	14-Sep-95	89.7 W	88.7 N	83.10	81.12
212	3.66	1.93	14-Sep-95	89.6 W	89.0 N	83.10	81.17
213	3.66	1.88	14-Sep-95	89.5 W	89.2 N	83.10	81.22
214	3.66	1.88	14-Sep-95	89.5 W	89.2 N	83.10	81.22
215	3.66	1.70	14-Sep-95	90.0	89.2 N	83.10	81.40
216	3.66	1.70	14-Sep-95	90.0	89.3 N	83.10	81.40
217	2.59	1.61	14-Sep-95	89.9 E	89.0 N	83.10	81.49
218	2.59	1.64	14-Sep-95	89.6 W	88.9 N	83.10	81.46
219	2.59	1.64	14-Sep-95	89.6 W	88.8 N	83.10	81.46
220	2.59	1.61	14-Sep-95	89.2 W	88.6 N	83.10	81.49
221	2.59	1.61	14-Sep-95	88.5 W	88.8 N	83.10	81.49
222	2.59	1.61	14-Sep-95	88.1 W	88.7 N	83.10	81.49
223	2.59	1.64	14-Sep-95	88.3 W	88.5 N	83.10	81.46
224	2.59	1.58	14-Sep-95	88.9 W	89.0 N	83.10	81.52
225	2.59	1.56	14-Sep-95	89.5 W	88.9 N	83.10	81.54

SHEET PILE DRIVING SUMMARY

OLD VENUS MINE SITE, CARCROSS, YUKON TERRITORY
WATERLOO BARRIER SYSTEM

Pile ID	Sheet Pile Length		Date	Plumbness		Sheet Elevation	
	Initial	Final		X-Axis	Y-Axis	Top	Bottom
226	2.59	1.84	14-Sep-95	89.3 W	88.7 N	83.10	81.26
227	2.59	1.92	14-Sep-95	88.3 W	88.6 N	83.10	81.19
228	2.59	2.04	14-Sep-95	88.5 W	88.8 N	83.10	81.06
229	2.59	1.89	14-Sep-95	89.3 W	88.6 N	83.10	81.21
230	2.59	1.84	14-Sep-95	90.0	88.7 N	83.10	81.26
231	2.59	1.86	14-Sep-95	89.8 E	88.7 N	83.10	81.24
232	2.59	1.84	14-Sep-95	89.2 W	89.0 N	83.10	81.26
233	2.59	1.81	14-Sep-95	89.6 W	88.9 N	83.10	81.29
234	2.59	1.79	14-Sep-95	89.5 W	88.9 N	83.10	81.31
235	2.59	1.74	14-Sep-95	89.0 W	89.0 S	83.10	81.36
236	2.59	1.61	14-Sep-95	89.4 W	89.5 N	83.10	81.49
237	2.59	1.61	14-Sep-95	88.5 W	89.4 N	83.10	81.49
238	2.59	1.58	14-Sep-95	89.3 W	89.6 S	83.10	81.52
239	2.59	1.58	14-Sep-95	89.2 W	89.8 S	83.10	81.52
240	2.59	1.74	14-Sep-95	88.2 W	89.4 S	83.10	81.36
241	2.59	2.14	14-Sep-95	88.7 W	89.4 S	83.10	80.96
242	2.59	2.30	14-Sep-95	88.7 W	89.4 S	83.10	80.80
243	2.59	2.30	14-Sep-95	89.7 W	90.0	83.10	80.80
244	2.59	2.19	14-Sep-95	89.4 W	89.9 N	83.10	80.91
245	2.59	2.40	14-Sep-95	89.1 W	89.7 N	83.10	80.70
246	2.59	2.30	15-Sep-95	88.2 E	89.6 N	83.10	80.80
247	3.66	3.03	15-Sep-95	88.9 E	89.2 S	83.10	80.08
248	3.66	2.59	15-Sep-95	89.5 W	90.0	83.10	80.51
249	3.66	2.59	15-Sep-95	87.0 E	86.5 S	83.10	80.51
250	3.66	2.67	15-Sep-95	87.5 E	87.0 S	83.10	80.43
251	3.66	2.80	15-Sep-95	88.5 E	89.2 N	83.10	80.30
252	3.66	2.97	15-Sep-95	88.6 E	89.9 S	83.10	80.13
253	3.66	3.15	15-Sep-95	87.4 W	89.5 S	83.10	79.95
254	3.66	3.13	15-Sep-95	88.0 W	88.2 S	83.10	79.97
255	3.66	3.38	15-Sep-95	88.9 E	89.4 S	83.10	79.72
256	3.66	3.41	15-Sep-95	88.7 E	88.8 S	83.10	79.69
257	3.66	3.46	15-Sep-95	89.4 E	89.2 S	83.10	79.64
258	3.66	3.51	15-Sep-95	89.4 E	88.8 S	83.10	79.59
259	3.66	3.46	15-Sep-95	89.5 E	89.2 S	83.10	79.64
260	3.66	3.36	15-Sep-95	89.3 E	88.8 S	83.10	79.74
261	3.66	3.30	15-Sep-95	89.3 E	88.2 S	83.10	79.80
262	3.66	3.23	15-Sep-95	88.0 E	89.2 N	83.10	79.87
263	3.66	3.43	15-Sep-95	88.0 W	89.2 S	83.10	79.67
264	3.66	3.46	15-Sep-95	88.4 W	87.2 S	83.10	79.64
265	4.11	3.53	15-Sep-95	86.6 W	86.6 S	83.10	79.57
266	4.11	3.58	15-Sep-95	89.2 W	88.2 S	83.10	79.52
267	4.11	3.50	15-Sep-95	88.4 W	89.3 S	83.10	79.60
268	4.11	3.40	15-Sep-95	89.3 W	89.4 S	83.10	79.70
269	4.11	3.35	15-Sep-95	89.2 W	88.4 S	83.10	79.75
270	4.11	3.27	15-Sep-95	89.4 E	88.5 S	83.10	79.83

SHEET PILE DRIVING SUMMARY

OLD VENUS MINE SITE, CARCROSS, YUKON TERRITORY
WATERLOO BARRIER SYSTEM

Pile ID	Sheet Pile Length		Date	Plumbness		Sheet Elevation	
	Initial	Final		X-Axis	Y-Axis	Top	Bottom
271	4.11	3.25	15-Sep-95	89.4 E	88.6 S	83.10	79.85
272	4.11	3.37	15-Sep-95	89.5 E	88.9 S	83.10	79.73
273	4.11	3.37	15-Sep-95	89.4 E	89.2 S	83.10	79.73
274	4.11	3.35	15-Sep-95	88.3 E	88.7 N	83.10	79.75
275	4.11	3.27	15-Sep-95	88.5 E	88.8 S	83.10	79.83
276	4.11	3.32	15-Sep-95	89.3 E	88.9 S	83.10	79.78
277	4.11	3.48	15-Sep-95	89.4 E	89.2 S	83.10	79.63
278	4.11	3.45	15-Sep-95	89.2 E	89.2 N	83.10	79.65
279	4.11	3.35	15-Sep-95	89.2 E	88.3 S	83.10	79.75
280	4.11	3.37	15-Sep-95	89.3 E	88.4 S	83.10	79.73
281	4.11	3.32	15-Sep-95	88.4 E	88.5 S	83.10	79.78
282	4.11	3.25	15-Sep-95	88.9 E	88.4 S	83.10	79.85
283	4.11	3.20	15-Sep-95	88.2 E	89.5 S	83.10	79.90
284	4.11	3.14	15-Sep-95	88.5 E	88.4 N	83.10	79.96
285	4.11	3.09	15-Sep-95	89.2 W	89.3 N	83.10	80.01
286	4.11	3.04	15-Sep-95	88.5 W	89.4 N	83.10	80.06
287	4.11	2.97	15-Sep-95	88.9 W	89.8 N	83.10	80.13
288	4.11	2.94	15-Sep-95	89.8 E	89.4 S	83.10	80.16
289	4.11	2.89	15-Sep-95	89.3 W	89.2 S	83.10	80.21
290	4.11	2.89	15-Sep-95	89.3 W	89.1 S	83.10	80.21
291	4.11	2.84	15-Sep-95	90.0	89.4 S	83.10	80.26
292	4.11	3.07	15-Sep-95	89.3 E	89.5 S	83.10	80.03
293	4.11	3.17	15-Sep-95	89.2 W	89.1 S	83.10	79.93
294	4.11	3.60	15-Sep-95	88.8 W	89.4 S	83.10	79.50
295	4.11	3.75	15-Sep-95	89.6 W	88.6 S	83.10	79.35
296	4.11	3.72	15-Sep-95	89.2 W	89.1 S	83.10	79.38
297	4.11	3.65	15-Sep-95	89.5 E	88.5 S	83.10	79.45
298	4.11	3.78	15-Sep-95	89.5 W	88.5 S	83.10	79.32
299	4.11	3.78	15-Sep-95	89.7 W	88.3 S	83.10	79.32
300	4.11	3.75	15-Sep-95	88.6 W	88.5 S	83.10	79.35
301	4.11	3.77	15-Sep-95	88.6 W	88.9 S	83.10	79.33
302	4.11	3.91	15-Sep-95	89.5 W	88.9 S	83.10	79.19
303	4.11	3.73	15-Sep-95	88.8 W	88.3 S	83.10	79.37
304	4.11	3.81	15-Sep-95	89.6 E	88.4 S	83.10	79.29
305	4.11	3.83	15-Sep-95	89.8 W	88.3 S	83.10	79.27
306	4.11	3.86	15-Sep-95	89.3 W	88.6 S	83.10	79.24
307	4.11	4.11	15-Sep-95	89.0 W	88.8 S	83.10	78.99
308	4.11	4.03	15-Sep-95	89.9 E	88.0 S	83.10	79.07
309	4.11	4.11	15-Sep-95	90.0	89.3 S	83.10	78.99
310	4.11	4.11	15-Sep-95	89.4 E	89.5 S	83.10	78.99
311	4.11	3.91	15-Sep-95	88.3 E	90.0	83.10	79.19
312	4.11	3.87	15-Sep-95	86.8 E	90.0	83.10	79.23
313	4.11	3.75	15-Sep-95	87.0 E	89.6 N	83.10	79.35
314	4.11	3.87	15-Sep-95	87.9 E	90.0	83.10	79.23
315	4.11	4.11	15-Sep-95	89.6 E	89.7 N	83.10	78.99

SHEET PILE DRIVING SUMMARY

OLD VENUS MINE SITE, CARCROSS, YUKON TERRITORY
WATERLOO BARRIER SYSTEM

Pile ID	Sheet Pile Length		Date	Plumbness		Sheet Elevation	
	Initial	Final		X-Axis	Y-Axis	Top	Bottom
316	4.11	4.07	15-Sep-95	89.0 E	89.4 N	83.10	79.03
317	4.11	4.11	15-Sep-95	90.0	89.5 N	83.10	78.99
318	4.11	4.11	15-Sep-95	90.0	89.5 N	83.10	78.99
319	4.11	4.11	15-Sep-95	89.7 E	89.0 N	83.10	78.99
320	4.11	3.83	15-Sep-95	89.3 W	88.5 N	83.10	79.27
321	4.11	3.82	15-Sep-95	89.5 W	88.3 N	83.10	79.28
322	4.11	4.08	15-Sep-95	90.0	88.0 N	83.10	79.02
323	4.11	4.10	15-Sep-95	89.4 W	87.8 N	83.10	79.00
324	4.11	4.08	15-Sep-95	89.6 E	87.8 N	83.10	79.02
325	4.11	4.11	15-Sep-95	89.2 W	87.5 N	83.10	78.99
326	4.11	3.79	15-Sep-95	89.2 W	88.0 N	83.10	79.31
327	4.11	3.78	15-Sep-95	88.7 W	87.7 N	83.10	79.32
328	4.11	3.81	16-Sep-95	89.8 E	88.0 N	83.10	79.29
329	4.11	3.89	16-Sep-95	89.5 W	87.5 N	83.10	79.21
330	4.11	3.88	16-Sep-95	89.4 W	87.3 N	83.10	79.22
331	4.11	3.84	16-Sep-95	89.5 W	87.2 N	83.10	79.26
332	4.11	3.89	16-Sep-95	89.5 W	87.0 N	83.10	79.21
333	4.11	4.11	16-Sep-95	88.5 W	86.7 N	83.10	78.99
334	4.11	4.08	16-Sep-95	89.0 W	86.8 N	83.10	79.02
335	4.11	4.08	16-Sep-95	89.8 W	85.9 N	83.10	79.02
336	4.11	4.08	16-Sep-95	89.4 W	86.0 N	83.10	79.02
337	4.11	4.08	16-Sep-95	87.7 W	86.0 N	83.10	79.02
338	4.11	4.06	16-Sep-95	87.8 W	85.3 N	83.10	79.04
339	4.11	3.96	16-Sep-95	88.5 W	84.5 N	83.10	79.14
340	4.11	4.08	16-Sep-95	86.1 W	83.8 N	83.10	79.02
341	4.11	4.00	16-Sep-95	89.9 E	82.4 N	83.10	79.10
342	4.11	3.83	16-Sep-95	89.3 W	81.7 N	83.10	79.27

APPENDIX C: JOINT INSPECTION SUMMARY

Table 5 contains the results of the sealable cavity inspection that was performed by the Quality Assurance Engineer following the installation of the WZ-75 sheet piles. Table 5 documents the following information:

- Pile Identification Number.
- Sheet Pile Joint Length.
- Probe Penetration Depth.
- Observations.

FINAL SEALABLE CAVITY INSPECTION REPORT

OLD VENUS MINE SITE, CARCROSS, YUKON TERRITORY

WATERLOO BARRIER SYSTEM

JOINT ID#	DATE	TANK ID #	JOINT LENGTH (m)	PROBE DEPTH (m)	OBSERVATIONS
1	18-Sep	12	3.64	3.63	
2	18-Sep	12	3.64	3.63	
3	18-Sep	12	3.50	3.50	
4	18-Sep	12	3.60	3.60	
5	18-Sep	12	3.60	3.60	
6	18-Sep	12	3.04	3.04	
7	18-Sep	12	2.92	2.92	
8	18-Sep	12	3.49	3.20	
9	18-Sep	12	3.23	3.05	
10	18-Sep	12	3.50	3.35	
11	18-Sep	12	3.49	3.35	
12	18-Sep	12	3.47	3.35	
13	18-Sep	12	3.48	3.35	
14	18-Sep	12	3.47	3.05	
15	18-Sep	12	3.48	3.05	
16	18-Sep	12	3.48	3.35	
17	18-Sep	12	3.48	3.35	
18	18-Sep	12	6.25	3.05	
19	18-Sep	12	5.57	5.49	
20	18-Sep	12	5.96	5.79	
21	18-Sep	12	6.02	6.02	
22	18-Sep	12	6.32	5.94	
23	18-Sep	12	6.49	6.49	
24	18-Sep	12	6.44	4.57	Constriction.
25	18-Sep	12	6.48	6.48	
26	18-Sep	12	7.13	4.27	Culvert.
27	18-Sep	12	7.03	3.05	Culvert.
28	18-Sep	12	7.04	3.66	
29	18-Sep	12	5.89	3.66	
30	18-Sep	12	5.63	3.66	Separated Joint.
31	18-Sep	12	6.06	5.18	
32	18-Sep	12	5.85	3.96	
33	18-Sep	12	6.28	4.57	
34	18-Sep	12	5.96	3.05	
35	18-Sep	12	6.63	4.57	
36	18-Sep	12	6.63	5.49	
37	18-Sep	12	6.63	5.49	
38	18-Sep	12	6.63	6.63	
39	18-Sep	12	6.91	6.71	
40	18-Sep	12	7.06	6.71	
41	11-Sep	6	6.53	5.79	
42	11-Sep	6	6.80	6.71	
43	11-Sep	6	6.94	6.40	
44	11-Sep	6	7.19	6.71	
45	11-Sep	6	7.19	7.01	

FINAL SEALABLE CAVITY INSPECTION REPORT

OLD VENUS MINE SITE, CARCROSS, YUKON TERRITORY

WATERLOO BARRIER SYSTEM

JOINT ID#	DATE	TANK ID #	JOINT LENGTH (m)	PROBE DEPTH (m)	OBSERVATIONS
46	11-Sep	6	7.31	7.16	
47	11-Sep	6	7.31	7.31	
48	11-Sep	6	7.00	7.00	
49	11-Sep	6	6.95	6.86	
50	11-Sep	6	7.31	6.95	
51	11-Sep	6	7.31	7.16	
52	11-Sep	6	7.31	7.16	
53	11-Sep	6	7.06	7.06	
54	11-Sep	6	6.84	6.84	
55	11-Sep	6	7.08	6.40	
56	11-Sep	6	6.99	6.86	
57	8-Sep	1	7.03	5.79	
58	8-Sep	1	7.21	6.86	
59	8-Sep	1	7.31	7.01	
60	8-Sep	1	7.12	7.12	
61	8-Sep	1	7.09	7.09	
62	8-Sep	1	7.09	7.07	
63	8-Sep	1	7.31	7.10	
64	8-Sep	1	7.21	7.21	
65	8-Sep	1	7.07	7.07	
66	8-Sep	1	7.01	7.01	
67	11-Sep	7	7.06	7.01	
68	8-Sep	1	7.06	7.06	
69	8-Sep	1	7.07	7.06	
70	8-Sep	1	6.82	6.82	
71	8-Sep	1	6.76	6.76	
72	8-Sep	1	7.09	6.76	
73	8-Sep	1	6.90	6.90	
74	8-Sep	1	7.16	6.90	
75	8-Sep	2	6.94	6.94	
76	8-Sep	2	7.16	6.94	
77	8-Sep	2	6.92	6.92	
78	8-Sep	2	7.16	6.92	
79	8-Sep	2	6.90	6.90	
80	8-Sep	2	7.16	6.90	
81	8-Sep	2	6.74	6.74	
82	8-Sep	2	6.78	6.74	
83	8-Sep	2	6.82	6.78	
84	8-Sep	2	7.09	6.82	
85	8-Sep	2	7.02	7.02	
86	8-Sep	2	7.18	7.02	
87	8-Sep	2	6.67	6.67	
88	8-Sep	2	6.74	6.67	
89	8-Sep	2	7.02	6.74	
90	8-Sep	2	7.06	7.02	

FINAL SEALABLE CAVITY INSPECTION REPORT

OLD VENUS MINE SITE, CARCROSS, YUKON TERRITORY

WATERLOO BARRIER SYSTEM

JOINT ID#	DATE	TANK ID #	JOINT LENGTH (m)	PROBE DEPTH (m)	OBSERVATIONS
91	8-Sep	2	7.02	7.02	
92	8-Sep	2	7.13	7.02	
93	8-Sep	2	7.21	7.13	
94	8-Sep	2	7.06	7.06	
95	8-Sep	2	6.92	6.92	
96	8-Sep	2	7.01	6.92	
97	8-Sep	2	6.93	6.93	
98	8-Sep	2	7.07	6.93	
99	8-Sep	2	7.09	7.07	
100	8-Sep	2	7.20	7.09	
101	11-Sep	7	7.19	7.19	
102	8-Sep	2	7.19	7.19	
103	8-Sep	2	7.15	7.15	
104	8-Sep	2	7.13	7.13	
105	8-Sep	2	7.06	7.06	
106	8-Sep	2	7.12	7.06	
107	8-Sep	2	7.10	7.10	
108	8-Sep	2	7.09	7.09	
109	8-Sep	2	6.90	6.90	
110	11-Sep	7	7.14	6.90	
111	8-Sep	2	7.19	7.14	
112	8-Sep	2	7.31	7.19	
113	8-Sep	2	7.16	7.16	
114	8-Sep	2	7.29	7.16	
115	8-Sep	2	7.28	7.28	
116	8-Sep	2	7.31	7.28	
117	8-Sep	2	6.85	6.85	
118	8-Sep	2	7.26	6.85	
119	11-Sep	7	7.12	7.12	
120	8-Sep	2	7.26	7.12	
121	11-Sep	7	7.00	7.00	
122	8-Sep	3	7.25	7.00	
123	8-Sep	3	7.27	7.25	
124	11-Sep	7	7.25	7.25	
125	8-Sep	3	7.26	7.25	
126	8-Sep	3	7.23	7.23	
127	8-Sep	3	7.21	7.21	
128	8-Sep	3	7.20	7.20	
129	8-Sep	3	7.10	7.10	
130	8-Sep	3	7.17	7.10	
131	8-Sep	3	7.15	7.15	
132	8-Sep	3	7.15	7.15	
133	11-Sep	7	7.15	7.15	
134	8-Sep	3	7.30	7.15	
135	11-Sep	7	7.11	7.11	

FINAL SEALABLE CAVITY INSPECTION REPORT

OLD VENUS MINE SITE, CARCROSS, YUKON TERRITORY

WATERLOO BARRIER SYSTEM

JOINT ID#	DATE	TANK ID #	JOINT LENGTH (m)	PROBE DEPTH (m)	OBSERVATIONS
136	8-Sep	3	7.28	7.11	
137	8-Sep	3	7.27	7.27	
138	8-Sep	3	7.27	7.27	
139	8-Sep	3	7.05	7.05	
140	8-Sep	3	7.27	7.05	
141	8-Sep	3	7.27	7.27	
142	8-Sep	3	7.27	7.27	
143	8-Sep	4	7.26	7.26	
144	11-Sep	7	7.19	7.19	
145	8-Sep	4	7.28	7.19	
146	8-Sep	4	7.25	7.25	
147	8-Sep	4	7.29	7.25	
148	8-Sep	4	7.25	7.25	
149	8-Sep	4	7.25	7.25	
150	8-Sep	4	7.25	7.25	
151	8-Sep	4	7.16	7.16	
152	8-Sep	4	6.95	6.95	
153	8-Sep	4	7.00	6.95	
154	8-Sep	4	7.25	7.00	
155	8-Sep	5	7.22	7.22	
156	8-Sep	5	7.24	7.22	
157	8-Sep	5	6.85	6.85	
158	8-Sep	5	6.90	6.85	
159	8-Sep	5	7.13	6.90	
160	8-Sep	5	7.13	7.13	
161	8-Sep	5	7.23	7.13	
162	11-Sep	7	7.24	7.23	
163	11-Sep	7	7.30	7.24	
164	11-Sep	7	7.02	7.02	
165	11-Sep	7	7.24	7.02	
166	11-Sep	7	7.25	7.24	
167	11-Sep	7	7.20	7.20	
168	11-Sep	7	7.04	7.04	
169	11-Sep	7	7.31	7.04	
170	11-Sep	7	7.31	7.31	
171	11-Sep	7	7.31	7.31	
172	15-Sep	8	7.31	7.31	
173	15-Sep	8	7.31	7.31	
174	15-Sep	8	7.31	7.31	
175	15-Sep	8	7.31	7.31	
176	15-Sep	8	7.31	7.31	
177	15-Sep	8	7.31	7.31	
178	15-Sep	8	7.31	7.31	
179	15-Sep	8	5.33	5.33	
180	15-Sep	8	5.33	5.33	

FINAL SEALABLE CAVITY INSPECTION REPORT

OLD VENUS MINE SITE, CARCROSS, YUKON TERRITORY

WATERLOO BARRIER SYSTEM

JOINT ID#	DATE	TANK ID #	JOINT LENGTH (m)	PROBE DEPTH (m)	OBSERVATIONS
181	15-Sep	8	5.33	5.33	
182	15-Sep	8	5.33	5.33	
183	15-Sep	8	5.33	5.33	
184	15-Sep	8	5.33	5.33	
185	15-Sep	8	5.33	5.33	
186	15-Sep	8	5.33	5.33	
187	15-Sep	8	5.33	5.33	
188	15-Sep	8	5.33	5.33	
189	15-Sep	8	5.33	5.33	
190	15-Sep	8	4.87	4.87	
191	15-Sep	8	4.80	4.80	
192	15-Sep	8	4.80	4.72	
193	15-Sep	9	4.82	4.72	
194	15-Sep	9	4.67	4.67	
195	15-Sep	9	4.67	4.66	
196	15-Sep	9	4.67	4.66	
197	15-Sep	9	4.31	4.31	
198	15-Sep	9	3.98	3.98	
199	15-Sep	9	3.48	3.48	
200	15-Sep	9	3.50	3.47	
201	15-Sep	9	3.60	#REF!	
202	15-Sep	9	3.55	3.55	
203	15-Sep	9	3.22	3.22	
204	15-Sep	9	2.82	2.82	
205	15-Sep	9	2.61	2.61	
206	15-Sep	9	2.59	2.59	
207	15-Sep	9	2.49	2.49	
208	15-Sep	9	2.03	2.02	
209	15-Sep	9	1.98	1.98	
210	15-Sep	9	1.93	1.93	
211	15-Sep	9	1.88	1.88	
212	15-Sep	9	1.88	1.88	
213	15-Sep	9	1.70	1.70	
214	15-Sep	9	1.70	1.70	
215	15-Sep	9	1.61	1.61	
216	15-Sep	9	1.64	1.64	
217	15-Sep	9	1.64	1.64	
218	15-Sep	9	1.61	1.61	
219	15-Sep	9	1.61	1.61	
220	15-Sep	9	1.61	1.61	
221	15-Sep	9	1.64	1.64	
222	15-Sep	9	1.58	1.58	
223	15-Sep	9	1.56	1.56	
224	15-Sep	9	1.84	1.84	
225	15-Sep	9	1.92	1.92	

FINAL SEALABLE CAVITY INSPECTION REPORT

OLD VENUS MINE SITE, CARCROSS, YUKON TERRITORY

WATERLOO BARRIER SYSTEM

JOINT ID#	DATE	TANK ID #	JOINT LENGTH (m)	PROBE DEPTH (m)	OBSERVATIONS
226	15-Sep	9	2.04	2.04	
227	15-Sep	9	1.89	1.89	
228	15-Sep	9	1.84	1.84	
229	15-Sep	9	1.86	1.86	
230	15-Sep	9	1.84	1.84	
231	15-Sep	9	1.81	1.81	
232	15-Sep	9	1.79	1.79	
233	15-Sep	9	1.74	1.74	
234	15-Sep	9	1.61	1.61	
235	15-Sep	9	1.61	1.61	
236	15-Sep	9	1.58	1.58	
237	15-Sep	9	1.58	1.58	
238	15-Sep	9	1.74	1.74	
239	15-Sep	9	2.14	2.14	
240	15-Sep	9	2.30	2.30	
241	15-Sep	9	2.30	2.30	
242	15-Sep	9	2.19	2.19	
243	15-Sep	9	2.40	2.40	
244	15-Sep	9	2.30	2.30	
245	15-Sep	9	3.03	3.03	
246	15-Sep	9	2.59	2.59	
247	15-Sep	9	2.59	2.59	
248	15-Sep	9	2.67	2.67	
249	15-Sep	9	2.80	2.80	
250	15-Sep	9	2.97	2.97	
251	16-Sep	10	3.15	3.15	
252	16-Sep	10	3.13	3.13	
253	16-Sep	10	3.38	3.38	
254	16-Sep	10	3.41	3.41	
255	16-Sep	10	3.46	3.46	
256	16-Sep	10	3.51	3.51	
257	16-Sep	10	3.46	3.46	
258	16-Sep	10	3.36	3.36	
259	16-Sep	10	3.30	3.30	
260	16-Sep	10	3.23	3.23	
261	16-Sep	10	3.43	3.43	
262	16-Sep	10	3.46	3.46	
263	16-Sep	10	3.53	3.53	
264	16-Sep	10	3.58	3.58	
265	16-Sep	10	3.50	3.50	
266	16-Sep	10	3.40	3.40	
267	16-Sep	10	3.35	3.35	
268	16-Sep	10	3.27	3.27	
269	16-Sep	10	3.25	3.25	
270	16-Sep	10	3.37	3.37	

FINAL SEALABLE CAVITY INSPECTION REPORT

OLD VENUS MINE SITE, CARCROSS, YUKON TERRITORY

WATERLOO BARRIER SYSTEM

JOINT ID#	DATE	TANK ID #	JOINT LENGTH (m)	PROBE DEPTH (m)	OBSERVATIONS
271	16-Sep	10	3.37	3.37	
272	16-Sep	10	3.35	3.35	
273	16-Sep	10	3.27	3.27	
274	16-Sep	10	3.32	3.32	
275	16-Sep	10	3.48	3.48	
276	16-Sep	10	3.45	3.45	
277	16-Sep	10	3.35	3.35	
278	16-Sep	10	3.37	3.37	
279	16-Sep	10	3.32	3.32	
280	16-Sep	10	3.25	3.25	
281	16-Sep	10	3.20	3.20	
282	16-Sep	10	3.14	3.14	
283	16-Sep	10	3.09	3.09	
284	16-Sep	10	3.04	3.04	
285	16-Sep	10	2.97	2.97	
286	16-Sep	10	2.94	2.94	
287	16-Sep	10	2.89	2.89	
288	16-Sep	10	2.89	2.89	
289	16-Sep	10	2.84	2.84	
290	16-Sep	10	3.07	3.07	
291	16-Sep	10	3.17	3.17	
292	16-Sep	10	3.60	3.60	
293	16-Sep	10	3.75	3.75	
294	16-Sep	10	3.72	3.72	
295	16-Sep	10	3.65	3.65	
296	16-Sep	10	3.78	3.78	
297	16-Sep	10	3.78	3.78	
298	16-Sep	10	3.75	3.75	
299	16-Sep	10	3.77	3.77	
300	16-Sep	10	3.91	3.91	
301	16-Sep	10	3.73	3.73	
302	16-Sep	10	3.81	3.81	
303	16-Sep	10	3.83	3.83	
304	16-Sep	10	3.86	3.86	
305	16-Sep	10	4.11	4.11	
306	16-Sep	10	4.03	4.03	
307	16-Sep	10	4.11	4.11	
308	16-Sep	10	4.11	4.11	
309	16-Sep	10	3.91	3.91	
310	16-Sep	10	3.87	3.87	
311	16-Sep	11	3.75	3.75	
312	16-Sep	11	3.87	3.87	
313	16-Sep	11	4.11	4.11	
314	16-Sep	11	4.07	4.07	
315	16-Sep	11	4.11	4.11	

FINAL SEALABLE CAVITY INSPECTION REPORT

OLD VENUS MINE SITE, CARCROSS, YUKON TERRITORY

WATERLOO BARRIER SYSTEM

JOINT ID#	DATE	TANK ID #	JOINT LENGTH (m)	PROBE DEPTH (m)	OBSERVATIONS
316	16-Sep	11	4.11	4.11	
317	16-Sep	11	4.11	4.11	
318	16-Sep	11	3.83	3.83	
319	16-Sep	11	3.82	3.82	
320	16-Sep	11	4.08	4.08	
321	16-Sep	11	4.10	4.10	
322	16-Sep	11	4.08	4.08	
323	16-Sep	11	4.11	4.11	
324	16-Sep	11	3.79	3.79	
325	16-Sep	11	3.78	3.78	
326	16-Sep	11	3.81	3.81	
327	16-Sep	11	3.89	3.89	
328	16-Sep	11	3.88	3.88	
329	16-Sep	11	3.84	3.84	
330	16-Sep	11	3.89	3.89	
331	16-Sep	11	4.11	4.11	
332	16-Sep	11	4.08	4.08	
333	16-Sep	11	4.08	4.08	
334	16-Sep	11	4.08	4.08	
335	16-Sep	11	4.08	4.08	
336	16-Sep	11	4.06	4.06	
337	16-Sep	11	3.96	3.96	
338	16-Sep	11	4.08	4.08	
339	16-Sep	11	4.00	4.00	
340	16-Sep	11	3.83	3.83	
341	16-Sep	11	3.83	3.83	

APPENDIX D: SEALANT INSTALLATION LOGS

Table 6 contains the results of the sealant installation monitoring performed by the Quality Assurance Engineer. This table provides the following installation data:

- Date of Sealant Installation.
- Start Time of Joint Sealant Installation.
- Volume of Sealant Injected During Primary.
- Depth of Grout Line Insertion during Injection.
- Date of Secondary Sealant Injection.
- Secondary Sealant Volume.

SEALANT INSTALLATION LOGS

OLD VENUS MINE SITE, CARCROSS, YUKON TERRITORY
WATERLOO BARRIER SYSTEM

	SHEET PILE DATA		PRIMARY SEALANT DATA						SECONDARY DATA	
JOINT I.D. #	SHEET LENGHT (m)	PROBE DEPTH (m)	DATE	TIME	GROUT (Litres)	LINE PRES.	TANK #	COMMENTS	DATE	GROUT (Litres)
1	3.64	3.63	19-Sep-95	11:58 AM	21.6	75.0	1		19-Sep-95	1.4
2	3.64	3.63	19-Sep-95	11:56 AM	21.6	75.0	1		19-Sep-95	2.4
3	3.50	3.50	19-Sep-95	11:53 AM	54.1	75.0	1		19-Sep-95	1.0
4	3.60	3.60	19-Sep-95	11:49 AM	32.5	75.0	1		19-Sep-95	2.1
5	3.60	3.60	19-Sep-95	11:46 AM	32.5	75.0	1		19-Sep-95	1.4
6	3.04	3.04	19-Sep-95	11:42 AM	32.5	75.0	1		19-Sep-95	2.1
7	2.92	2.92	19-Sep-95	11:40 AM	32.5	75.0	1		19-Sep-95	0.3
8	3.49	3.20	19-Sep-95	11:28 AM	43.3	75.0	1		19-Sep-95	0.7
9	3.23	3.05	19-Sep-95	11:26 AM	21.6	75.0	1		19-Sep-95	2.1
10	3.50	3.35	19-Sep-95	11:24 AM	21.6	75.0	1		19-Sep-95	1.4
11	3.49	3.35	19-Sep-95	11:22 AM	21.6	75.0	1		19-Sep-95	1.7
12	3.47	3.35	19-Sep-95	11:20 AM	21.6	75.0	1		19-Sep-95	1.4
13	3.48	3.35	19-Sep-95	11:17 AM	32.5	75.0	1		19-Sep-95	1.7
14	3.47	3.05	19-Sep-95	11:15 AM	32.5	75.0	1		19-Sep-95	1.9
15	3.48	3.05	19-Sep-95	11:13 AM	32.5	75.0	1	Sample #6	19-Sep-95	1.7
16	3.48	3.35	19-Sep-95	11:10 AM	43.3	75.0	1		19-Sep-95	1.9
17	3.48	3.35	19-Sep-95	11:08 AM	32.5	75.0	1		19-Sep-95	0.3
18	6.25	3.05	19-Sep-95	11:00 AM	43.3	75.0	1		19-Sep-95	2.1
19	5.57	5.49	19-Sep-95	10:57 AM	54.1	75.0	1		19-Sep-95	1.4
20	5.96	5.79	19-Sep-95	10:55 AM	32.5	75.0	1		19-Sep-95	2.1
21	6.02	6.02	19-Sep-95	10:51 AM	43.3	75.0	1		19-Sep-95	1.9
22	6.32	5.94	19-Sep-95	10:47 AM	43.3	75.0	1		19-Sep-95	2.1
23	6.49	6.49	19-Sep-95	10:42 AM	32.5	75.0	1		19-Sep-95	2.1
24	6.44	4.57	19-Sep-95	10:37 AM	54.1	75.0	1		19-Sep-95	6.6
25	6.48	6.48	19-Sep-95	10:31 AM	32.5	75.0	1		19-Sep-95	4.2
26	7.13	4.27	19-Sep-95	10:29 AM	32.5	75.0	1	Culvert.	19-Sep-95	3.8
27	7.03	3.05	19-Sep-95	10:26 AM	43.3	75.0	1	Culvert.	19-Sep-95	1.7
28	7.04	3.66	19-Sep-95	10:24 AM	32.5	75.0	1		19-Sep-95	2.1
29	5.89	3.66	19-Sep-95	10:21 AM	32.5	75.0	1		19-Sep-95	2.6
30	5.63	3.66	19-Sep-95	10:14 AM	64.9	75.0	1	Separated Joint.	19-Sep-95	1.9
31	6.06	5.18	19-Sep-95	10:09 AM	64.9	75.0	1		19-Sep-95	2.1
32	5.85	3.96	19-Sep-95	10:08 AM	16.2	75.0	1		19-Sep-95	2.1
33	6.28	4.57	19-Sep-95	10:06 AM	21.6	80.0	1		19-Sep-95	0.0
34	5.96	3.05	19-Sep-95	10:02 AM	43.3	80.0	1		19-Sep-95	1.7
35	6.63	4.57	19-Sep-95	10:00 AM	32.5	80.0	1		19-Sep-95	2.1

SEALANT INSTALLATION LOGS

OLD VENUS MINE SITE, CARCROSS, YUKON TERRITORY
WATERLOO BARRIER SYSTEM

	SHEET PILE DATA		PRIMARY SEALANT DATA						SECONDARY DATA	
JOINT I.D. #	SHEET LENGHT (m)	PROBE DEPTH (m)	DATE	TIME	GROUT (Litres)	LINE PRES.	TANK #	COMMENTS	DATE	GROUT (Litres)
36	6.63	5.49	19-Sep-95	8:54 AM	54.1	80.0	1		19-Sep-95	2.4
37	6.63	5.49	19-Sep-95	9:51 AM	43.3	80.0	1		19-Sep-95	1.4
38	6.63	6.63	19-Sep-95	9:48 AM	43.3	80.0	1		19-Sep-95	1.4
39	6.91	6.71	19-Sep-95	9:46 AM	32.5	80.0	1		19-Sep-95	0.7
40	7.06	6.71	19-Sep-95	9:43 AM	32.5	80.0	1		19-Sep-95	2.8
41	6.53	5.79	19-Sep-95	9:40 AM	32.5	80.0	1		19-Sep-95	1.7
42	6.80	6.71	19-Sep-95	9:37 AM	32.5	80.0	1		19-Sep-95	1.4
43	6.94	6.40	19-Sep-95	9:33 AM	32.5	80.0	1		19-Sep-95	1.4
44	7.19	6.71	19-Sep-95	9:30 AM	32.5	80.0	1		19-Sep-95	1.0
45	7.19	7.01	19-Sep-95	9:28 AM	43.3	80.0	1		19-Sep-95	0.7
46	7.31	7.16	19-Sep-95	9:26 AM	43.3	80.0	1		19-Sep-95	0.3
47	7.31	7.31	19-Sep-95	9:24 AM	32.5	80.0	1		19-Sep-95	0.3
48	7.00	7.00	19-Sep-95	9:20 AM	32.5	80.0	1		19-Sep-95	0.7
49	6.95	6.86	19-Sep-95	9:18 AM	32.5	80.0	1		19-Sep-95	0.0
50	7.31	6.95	13-Sep-95	8:06 AM	75.8	80.0	1		14-Sep-95	2.8
51	7.31	7.16	13-Sep-95	8:12 AM	21.6	80.0	1		14-Sep-95	2.8
52	7.31	7.16	13-Sep-95	8:14 AM	54.1	80.0	1		14-Sep-95	2.8
53	7.06	7.06	13-Sep-95	8:16 AM	54.1	80.0	1		14-Sep-95	2.4
54	6.84	6.84	13-Sep-95	8:18 AM	75.8	80.0	1		14-Sep-95	2.1
55	7.08	6.40	13-Sep-95	8:19 AM	21.6	80.0	1		14-Sep-95	2.1
56	6.99	6.86	13-Sep-95	8:22 AM	21.6	80.0	1		14-Sep-95	2.1
57	7.03	5.79	13-Sep-95	8:27 AM	21.6	80.0	1		14-Sep-95	1.4
58	7.21	6.86	13-Sep-95	8:29 AM	10.8	80.0	1		14-Sep-95	2.1
59	7.31	7.01	13-Sep-95	8:31 AM	21.6	80.0	1		14-Sep-95	1.7
60	7.12	7.12	13-Sep-95	8:33 AM	32.5	80.0	1		14-Sep-95	1.7
61	7.09	7.09	13-Sep-95	8:36 AM	21.6	80.0	1		14-Sep-95	2.4
62	7.09	7.07	13-Sep-95	8:38 AM	21.6	80.0	1		14-Sep-95	2.4
63	7.31	7.10	13-Sep-95	8:41 AM	10.8	80.0	1	Sample #1	14-Sep-95	2.4
64	7.21	7.21	13-Sep-95	8:43 AM	21.6	80.0	1		14-Sep-95	2.1
65	7.07	7.07	13-Sep-95	8:45 AM	16.2	80.0	1		14-Sep-95	2.4
66	7.01	7.01	13-Sep-95	8:47 AM	21.6	80.0	1		14-Sep-95	1.7
67	7.06	7.01	13-Sep-95	8:50 AM	10.8	80.0	1		14-Sep-95	1.7
68	7.06	7.06	13-Sep-95	8:52 AM	10.8	80.0	1		14-Sep-95	1.0
69	7.07	7.06	13-Sep-95	8:54 AM	32.5	80.0	1		14-Sep-95	1.0
70	6.82	6.82	13-Sep-95	8:57 AM	27.1	80.0	1		14-Sep-95	1.7

SEALANT INSTALLATION LOGS

OLD VENUS MINE SITE, CARCROSS, YUKON TERRITORY
WATERLOO BARRIER SYSTEM

	SHEET PILE DATA		PRIMARY SEALANT DATA						SECONDARY DATA	
JOINT I.D. #	SHEET LENGHT (m)	PROBE DEPTH (m)	DATE	TIME	GROUT (Litres)	LINE PRES.	TANK #	COMMENTS	DATE	GROUT (Litres)
71	6.76	6.76	13-Sep-95	9:00 AM	32.5	80.0	1		14-Sep-95	1.7
72	7.09	6.76	13-Sep-95	9:03 AM	32.5	80.0	1		14-Sep-95	1.7
73	6.90	6.90	13-Sep-95	9:05 AM	21.6	80.0	1		14-Sep-95	1.7
74	7.16	6.90	13-Sep-95	9:17 AM	21.6	80.0	1		14-Sep-95	1.7
75	6.94	6.94	13-Sep-95	9:21 AM	21.6	80.0	1		14-Sep-95	1.7
76	7.16	6.94	13-Sep-95	9:23 AM	10.8	80.0	1		14-Sep-95	1.7
77	6.92	6.92	13-Sep-95	9:26 AM	21.6	80.0	1		14-Sep-95	1.7
78	7.16	6.92	13-Sep-95	9:29 AM	21.6	80.0	1		14-Sep-95	1.7
79	6.90	6.90	13-Sep-95	9:33 AM	21.6	80.0	1		14-Sep-95	1.7
80	7.16	6.90	13-Sep-95	9:36 AM	43.3	80.0	1		14-Sep-95	1.7
81	6.74	6.74	13-Sep-95	9:40 AM	43.3	80.0	1		14-Sep-95	1.7
82	6.78	6.74	13-Sep-95	9:44 AM	21.6	80.0	1		14-Sep-95	1.7
83	6.82	6.78	13-Sep-95	9:47 AM	27.1	80.0	1		14-Sep-95	1.7
84	7.09	6.82	13-Sep-95	9:49 AM	16.2	80.0	1		14-Sep-95	1.7
85	7.02	7.02	13-Sep-95	9:52 AM	37.9	80.0	1		14-Sep-95	1.7
86	7.18	7.02	13-Sep-95	9:56 AM	48.7	80.0	1		14-Sep-95	1.7
87	6.67	6.67	13-Sep-95	10:00 AM	10.8	80.0	1		14-Sep-95	1.7
88	6.74	6.67	13-Sep-95	10:04 AM	21.6	80.0	1		14-Sep-95	1.7
89	7.02	6.74	13-Sep-95	10:07 AM	27.1	80.0	1		14-Sep-95	1.7
90	7.06	7.02	13-Sep-95	10:11 AM	21.6	80.0	1		14-Sep-95	1.7
91	7.02	7.02	13-Sep-95	10:15 AM	21.6	80.0	1		14-Sep-95	1.7
92	7.13	7.02	13-Sep-95	10:19 AM	27.1	80.0	1		14-Sep-95	1.7
93	7.21	7.13	13-Sep-95	10:22 AM	21.6	80.0	1		14-Sep-95	1.7
94	7.06	7.06	13-Sep-95	10:25 AM	16.2	80.0	1		14-Sep-95	1.7
95	6.92	6.92	13-Sep-95	10:30 AM	32.5	80.0	1		14-Sep-95	1.7
96	7.01	6.92	13-Sep-95	10:34 AM	43.3	80.0	1		14-Sep-95	1.7
97	6.93	6.93	13-Sep-95	10:39 AM	32.5	80.0	1		14-Sep-95	1.7
98	7.07	6.93	13-Sep-95	10:42 AM	32.5	80.0	1		14-Sep-95	1.7
99	7.09	7.07	13-Sep-95	10:47 AM	54.1	80.0	1		14-Sep-95	1.7
100	7.20	7.09	13-Sep-95	10:58 AM	54.1	80.0	1		14-Sep-95	1.7
101	7.19	7.19	13-Sep-95	11:08 AM	32.5	80.0	1		14-Sep-95	1.7
102	7.19	7.19	13-Sep-95	11:09 AM	21.6	80.0	1		14-Sep-95	1.7
103	7.15	7.15	13-Sep-95	11:12 AM	21.6	80.0	1		14-Sep-95	1.7
104	7.13	7.13	13-Sep-95	11:14 AM	43.3	80.0	1		14-Sep-95	1.7
105	7.06	7.06	13-Sep-95	11:17 AM	21.6	80.0	1		14-Sep-95	1.7

SEALANT INSTALLATION LOGS

OLD VENUS MINE SITE, CARCROSS, YUKON TERRITORY
WATERLOO BARRIER SYSTEM

	SHEET PILE DATA		PRIMARY SEALANT DATA						SECONDARY DATA	
JOINT I.D. #	SHEET LENGHT (m)	PROBE DEPTH (m)	DATE	TIME	GROUT (Litres)	LINE PRES.	TANK #	COMMENTS	DATE	GROUT (Litres)
106	7.12	7.06	13-Sep-95	11:21 AM	32.5	80.0	1		14-Sep-95	1.7
107	7.10	7.10	13-Sep-95	11:23 AM	10.8	80.0	1		14-Sep-95	1.7
108	7.09	7.09	13-Sep-95	11:25 AM	21.6	80.0	1		14-Sep-95	1.7
109	6.90	6.90	13-Sep-95	1:34 PM	21.6	80.0	1		14-Sep-95	1.7
110	7.14	6.90	13-Sep-95	1:36 PM	32.5	80.0	1		14-Sep-95	1.7
111	7.19	7.14	13-Sep-95	1:39 PM	16.2	80.0	1		14-Sep-95	1.7
112	7.31	7.19	13-Sep-95	1:42 PM	27.1	80.0	1		14-Sep-95	1.7
113	7.16	7.16	13-Sep-95	1:44 PM	21.6	80.0	1		14-Sep-95	1.7
114	7.29	7.16	13-Sep-95	1:47 PM	21.6	80.0	1		14-Sep-95	1.7
115	7.28	7.28	13-Sep-95	1:49 PM	32.5	80.0	1		14-Sep-95	1.7
116	7.31	7.28	13-Sep-95	1:53 PM	27.1	80.0	1		14-Sep-95	1.7
117	6.85	6.85	13-Sep-95	1:56 PM	48.7	80.0	1		14-Sep-95	1.7
118	7.26	6.85	13-Sep-95	2:00 PM	21.6	80.0	1		14-Sep-95	1.7
119	7.12	7.12	13-Sep-95	2:03 PM	16.2	80.0	1		14-Sep-95	1.7
120	7.26	7.12	13-Sep-95	2:05 PM	32.5	80.0	1		14-Sep-95	1.7
121	7.00	7.00	13-Sep-95	2:08 PM	21.6	80.0	1	Sample #2	14-Sep-95	1.7
122	7.25	7.00	13-Sep-95	2:11 PM	43.3	80.0	1		14-Sep-95	1.7
123	7.27	7.25	13-Sep-95	2:15 PM	32.5	80.0	1		14-Sep-95	1.7
124	7.25	7.25	13-Sep-95	2:19 PM	21.6	80.0	1		14-Sep-95	1.7
125	7.26	7.25	13-Sep-95	2:22 PM	32.5	80.0	1		14-Sep-95	1.7
126	7.23	7.23	13-Sep-95	2:25 PM	10.8	80.0	1		14-Sep-95	1.4
127	7.21	7.21	13-Sep-95	2:28 PM	21.6	80.0	1		14-Sep-95	1.4
128	7.20	7.20	13-Sep-95	2:31 PM	16.2	80.0	1		14-Sep-95	1.4
129	7.10	7.10	13-Sep-95	2:35 PM	21.6	80.0	1		14-Sep-95	1.4
130	7.17	7.10	13-Sep-95	2:39 PM	21.6	80.0	1		14-Sep-95	1.4
131	7.15	7.15	13-Sep-95	2:42 PM	32.5	80.0	1		14-Sep-95	1.4
132	7.15	7.15	13-Sep-95	2:45 PM	32.5	80.0	1		14-Sep-95	1.4
133	7.15	7.15	13-Sep-95	2:56 PM	21.6	80.0	1		14-Sep-95	1.4
134	7.30	7.15	13-Sep-95	2:58 PM	21.6	80.0	1		14-Sep-95	1.4
135	7.11	7.11	13-Sep-95	3:00 PM	21.6	80.0	1		14-Sep-95	1.4
136	7.28	7.11	13-Sep-95	3:03 PM	32.5	80.0	1		14-Sep-95	1.4
137	7.27	7.27	13-Sep-95	3:06 PM	10.8	80.0	1		14-Sep-95	1.4
138	7.27	7.27	13-Sep-95	3:08 PM	21.6	80.0	1		14-Sep-95	1.4
139	7.05	7.05	13-Sep-95	3:11 PM	10.8	80.0	1		14-Sep-95	1.4
140	7.27	7.05	13-Sep-95	3:13 PM	21.6	80.0	1		14-Sep-95	1.4

SEALANT INSTALLATION LOGS

OLD VENUS MINE SITE, CARCROSS, YUKON TERRITORY
WATERLOO BARRIER SYSTEM

	SHEET PILE DATA		PRIMARY SEALANT DATA						SECONDARY DATA	
JOINT I.D. #	SHEET LENGHT (m)	PROBE DEPTH (m)	DATE	TIME	GROUT (Litres)	LINE PRES.	TANK #	COMMENTS	DATE	GROUT (Litres)
141	7.27	7.27	13-Sep-95	3:17 PM	32.5	80.0	1		14-Sep-95	1.4
142	7.27	7.27	13-Sep-95	3:25 PM	37.9	80.0	1		14-Sep-95	1.4
143	7.26	7.26	13-Sep-95	3:31 PM	10.8	80.0	1		14-Sep-95	1.4
144	7.19	7.19	13-Sep-95	3:33 PM	21.6	80.0	1		14-Sep-95	1.4
145	7.28	7.19	13-Sep-95	3:37 PM	10.8	80.0	1		14-Sep-95	1.4
146	7.25	7.25	13-Sep-95	3:39 PM	10.8	80.0	1		14-Sep-95	1.4
147	7.29	7.25	13-Sep-95	3:41 PM	21.6	80.0	1		14-Sep-95	1.4
148	7.25	7.25	13-Sep-95	3:44 PM	21.6	80.0	1		14-Sep-95	1.4
149	7.25	7.25	13-Sep-95	3:47 PM	10.8	80.0	1		14-Sep-95	1.4
150	7.25	7.25	13-Sep-95	3:49 PM	21.6	80.0	1		14-Sep-95	1.4
151	7.16	7.16	13-Sep-95	3:51 PM	27.1	80.0	1		14-Sep-95	1.4
152	6.95	6.95	13-Sep-95	3:54 PM	32.5	80.0	1		14-Sep-95	1.4
153	7.00	6.95	13-Sep-95	3:59 PM	21.6	80.0	1		14-Sep-95	1.4
154	7.25	7.00	13-Sep-95	4:01 PM	32.5	80.0	1		14-Sep-95	1.4
155	7.22	7.22	13-Sep-95	4:07 PM	10.8	80.0	1		14-Sep-95	1.4
156	7.24	7.22	13-Sep-95	4:09 PM	21.6	80.0	1		14-Sep-95	1.4
157	6.85	6.85	13-Sep-95	4:11 PM	21.6	80.0	1		14-Sep-95	1.4
158	6.90	6.85	16-Sep-95	8:08 AM	10.8	80.0	1		17-Sep-95	1.7
159	7.13	6.90	16-Sep-95	8:10 AM	400.5	80.0	1		17-Sep-95	1.7
160	7.13	7.13	16-Sep-95	8:12 AM	32.5	80.0	1		17-Sep-95	1.7
161	7.23	7.13	16-Sep-95	8:15 AM	43.3	80.0	1		17-Sep-95	2.1
162	7.24	7.23	16-Sep-95	8:20 AM	32.5	80.0	1		17-Sep-95	2.1
163	7.30	7.24	16-Sep-95	8:28 AM	32.5	80.0	1		17-Sep-95	2.8
164	7.02	7.02	16-Sep-95	8:34 AM	54.1	80.0	1		17-Sep-95	1.4
165	7.24	7.02	16-Sep-95	8:41 AM	32.5	80.0	1		17-Sep-95	1.4
166	7.25	7.24	16-Sep-95	8:50 AM	32.5	80.0	1		17-Sep-95	1.0
167	7.20	7.20	16-Sep-95	8:55 AM	32.5	80.0	1		17-Sep-95	2.1
168	7.04	7.04	16-Sep-95	8:58 AM	32.5	80.0	1		17-Sep-95	4.9
169	7.31	7.04	16-Sep-95	9:10 AM	32.5	80.0	1		17-Sep-95	4.9
170	7.31	7.31	16-Sep-95	9:15 AM	54.1	80.0	1		17-Sep-95	5.6
171	7.31	7.31	16-Sep-95	9:20 AM	54.1	80.0	1		17-Sep-95	4.9
172	7.31	7.31	16-Sep-95	9:25 AM	75.8	80.0	1		17-Sep-95	4.9
173	7.31	7.31	16-Sep-95	9:30 AM	43.3	80.0	1		17-Sep-95	2.4
174	7.31	7.31	16-Sep-95	9:40 AM	43.3	80.0	1	Sample #3	17-Sep-95	5.2
175	7.31	7.31	16-Sep-95	9:45 AM	21.6	80.0	1		17-Sep-95	4.2

SEALANT INSTALLATION LOGS

OLD VENUS MINE SITE, CARCROSS, YUKON TERRITORY
WATERLOO BARRIER SYSTEM

	SHEET PILE DATA		PRIMARY SEALANT DATA						SECONDARY DATA	
JOINT I.D. #	SHEET LENGHT (m)	PROBE DEPTH (m)	DATE	TIME	GROUT (Litres)	LINE PRES.	TANK #	COMMENTS	DATE	GROUT (Litres)
176	7.31	7.31	16-Sep-95	9:53 AM	21.6	80.0	1		17-Sep-95	2.8
177	7.31	7.31	16-Sep-95	9:58 AM	43.3	80.0	1		17-Sep-95	3.5
178	7.31	7.31	16-Sep-95	10:03 AM	32.5	80.0	1		17-Sep-95	5.2
179	5.33	5.33	16-Sep-95	10:06 AM	21.6	80.0	1		17-Sep-95	5.2
180	5.33	5.33	16-Sep-95	10:10 AM	32.5	80.0	1		17-Sep-95	4.5
181	5.33	5.33	16-Sep-95	10:13 AM	43.3	80.0	1		17-Sep-95	4.5
182	5.33	5.33	16-Sep-95	10:17 AM	32.5	80.0	1		17-Sep-95	4.5
183	5.33	5.33	16-Sep-95	10:20 AM	54.1	80.0	1		17-Sep-95	4.9
184	5.33	5.33	16-Sep-95	10:23 AM	32.5	80.0	1		17-Sep-95	4.5
185	5.33	5.33	16-Sep-95	10:27 AM	21.6	80.0	1		17-Sep-95	4.2
186	5.33	5.33	16-Sep-95	10:31 AM	54.1	80.0	1		17-Sep-95	4.5
187	5.33	5.33	16-Sep-95	10:35 AM	32.5	80.0	1		17-Sep-95	4.2
188	5.33	5.33	16-Sep-95	10:38 AM	10.8	80.0	1		17-Sep-95	4.2
189	5.33	5.33	16-Sep-95	10:40 AM	21.6	80.0	1		17-Sep-95	2.8
190	4.87	4.87	16-Sep-95	10:42 AM	21.6	80.0	1		17-Sep-95	5.6
191	4.80	4.80	16-Sep-95	10:44 AM	21.6	80.0	1		17-Sep-95	5.6
192	4.80	4.72	16-Sep-95	10:46 AM	21.6	80.0	1		17-Sep-95	5.2
193	4.82	4.72	16-Sep-95	10:49 AM	21.6	80.0	1		17-Sep-95	4.9
194	4.67	4.67	16-Sep-95	10:51 AM	21.6	80.0	1		17-Sep-95	4.5
195	4.67	4.66	16-Sep-95	10:54 AM	21.6	80.0	1		17-Sep-95	4.2
196	4.67	4.66	16-Sep-95	10:56 AM	21.6	80.0	1		17-Sep-95	4.5
197	4.31	4.31	16-Sep-95	10:58 AM	21.6	80.0	1		17-Sep-95	4.9
198	3.98	3.98	16-Sep-95	11:01 AM	21.6	80.0	1		17-Sep-95	4.9
199	3.48	3.48	16-Sep-95	11:02 AM	21.6	80.0	1		17-Sep-95	2.1
200	3.50	3.47	16-Sep-95	11:05 AM	21.6	80.0	1		17-Sep-95	3.8
201	3.60	#REF!	16-Sep-95	11:07 AM	32.5	80.0	1		17-Sep-95	3.1
202	3.55	3.55	16-Sep-95	11:10 AM	21.6	80.0	1		17-Sep-95	3.5
203	3.22	3.22	16-Sep-95	11:12 AM	21.6	80.0	1		17-Sep-95	3.5
204	2.82	2.82	16-Sep-95	11:14 AM	32.5	80.0	1		17-Sep-95	2.8
205	2.61	2.61	16-Sep-95	11:16 AM	21.6	80.0	1		17-Sep-95	3.1
206	2.59	2.59	16-Sep-95	11:19 AM	21.6	80.0	1		17-Sep-95	2.8
207	2.49	2.49	16-Sep-95	11:21 AM	21.6	80.0	1		17-Sep-95	2.8
208	2.03	2.02	16-Sep-95	2:08 PM	21.6	80.0	1		17-Sep-95	1.7
209	1.98	1.98	16-Sep-95	2:11 PM	21.6	80.0	1		17-Sep-95	2.4
210	1.93	1.93	16-Sep-95	2:13 PM	10.8	80.0	1		17-Sep-95	1.7

SEALANT INSTALLATION LOGS

OLD VENUS MINE SITE, CARCROSS, YUKON TERRITORY
WATERLOO BARRIER SYSTEM

	SHEET PILE DATA		PRIMARY SEALANT DATA						SECONDARY DATA	
JOINT I.D. #	SHEET LENGHT (m)	PROBE DEPTH (m)	DATE	TIME	GROUT (Litres)	LINE PRES.	TANK #	COMMENTS	DATE	GROUT (Litres)
211	1.88	1.88	16-Sep-95	2:16 PM	21.6	80.0	1		17-Sep-95	1.4
212	1.88	1.88	16-Sep-95	2:18 PM	21.6	80.0	1		17-Sep-95	1.7
213	1.70	1.70	16-Sep-95	2:19 PM	10.8	80.0	1		17-Sep-95	1.4
214	1.70	1.70	16-Sep-95	2:21 PM	10.8	80.0	1		17-Sep-95	1.0
215	1.61	1.61	16-Sep-95	2:23 PM	10.8	80.0	1		17-Sep-95	1.4
216	1.64	1.64	16-Sep-95	2:24 PM	10.8	80.0	1		17-Sep-95	1.0
217	1.64	1.64	16-Sep-95	2:25 PM	10.8	80.0	1		17-Sep-95	1.0
218	1.61	1.61	16-Sep-95	2:17 PM	10.8	80.0	1		17-Sep-95	1.4
219	1.61	1.61	16-Sep-95	2:28 PM	16.2	80.0	1		17-Sep-95	1.4
220	1.61	1.61	16-Sep-95	2:19 PM	16.2	80.0	1		17-Sep-95	1.4
221	1.64	1.64	16-Sep-95	2:31 PM	10.8	80.0	1		17-Sep-95	1.4
222	1.58	1.58	16-Sep-95	2:32 PM	10.8	80.0	1		17-Sep-95	1.0
223	1.56	1.56	16-Sep-95	2:34 PM	10.8	80.0	1		17-Sep-95	1.4
224	1.84	1.84	16-Sep-95	2:35 PM	10.8	80.0	1		17-Sep-95	1.4
225	1.92	1.92	16-Sep-95	2:35 PM	21.6	80.0	1		17-Sep-95	1.4
226	2.04	2.04	16-Sep-95	2:37 PM	10.8	80.0	1		17-Sep-95	1.4
227	1.89	1.89	16-Sep-95	3:38 AM	10.8	80.0	1		17-Sep-95	1.7
228	1.84	1.84	16-Sep-95	2:40 PM	10.8	80.0	1		17-Sep-95	1.4
229	1.86	1.86	16-Sep-95	2:41 PM	10.8	80.0	1		17-Sep-95	1.7
230	1.84	1.84	16-Sep-95	2:43 PM	10.8	80.0	1		17-Sep-95	1.4
231	1.81	1.81	16-Sep-95	2:44 PM	10.8	80.0	1		17-Sep-95	0.7
232	1.79	1.79	16-Sep-95	2:45 PM	10.8	80.0	1		17-Sep-95	1.0
233	1.74	1.74	16-Sep-95	2:46 PM	10.8	80.0	1		17-Sep-95	1.4
234	1.61	1.61	16-Sep-95	2:48 PM	10.8	80.0	1		17-Sep-95	1.0
235	1.61	1.61	16-Sep-95	2:50 PM	21.6	80.0	1		17-Sep-95	1.4
236	1.58	1.58	16-Sep-95	2:53 PM	10.8	80.0	1		17-Sep-95	0.7
237	1.58	1.58	16-Sep-95	2:54 PM	10.8	80.0	1		17-Sep-95	1.0
238	1.74	1.74	16-Sep-95	2:55 PM	5.4	80.0	1		17-Sep-95	0.3
239	2.14	2.14	16-Sep-95	2:56 PM	10.8	80.0	1		17-Sep-95	0.7
240	2.30	2.30	16-Sep-95	2:57 PM	10.8	80.0	1		17-Sep-95	0.7
241	2.30	2.30	16-Sep-95	2:58 PM	10.8	80.0	1		17-Sep-95	1.4
242	2.19	2.19	16-Sep-95	2:59 PM	10.8	80.0	1		17-Sep-95	0.3
243	2.40	2.40	16-Sep-95	3:01 PM	10.8	80.0	1		17-Sep-95	1.7
244	2.30	2.30	16-Sep-95	3:03 PM	10.8	80.0	1		17-Sep-95	1.7
245	3.03	3.03	16-Sep-95	3:05 PM	10.8	80.0	1		17-Sep-95	1.4

SEALANT INSTALLATION LOGS

OLD VENUS MINE SITE, CARCROSS, YUKON TERRITORY
WATERLOO BARRIER SYSTEM

	SHEET PILE DATA		PRIMARY SEALANT DATA						SECONDARY DATA	
JOINT I.D. #	SHEET LENGHT (m)	PROBE DEPTH (m)	DATE	TIME	GROUT (Litres)	LINE PRES.	TANK #	COMMENTS	DATE	GROUT (Litres)
246	2.59	2.59	16-Sep-95	3:07 PM	10.8	80.0	1		17-Sep-95	1.4
247	2.59	2.59	16-Sep-95	3:09 PM	10.8	80.0	1		17-Sep-95	1.7
248	2.67	2.67	16-Sep-95	3:11 PM	21.6	80.0	1		17-Sep-95	1.7
249	2.80	2.80	16-Sep-95	3:13 PM	21.6	80.0	1		17-Sep-95	2.1
250	2.97	2.97	16-Sep-95	3:15 PM	21.6	80.0	1		17-Sep-95	2.8
251	3.15	3.15	16-Sep-95	3:17 PM	10.8	80.0	1		17-Sep-95	2.4
252	3.13	3.13	16-Sep-95	3:20 PM	10.8	80.0	1		17-Sep-95	1.4
253	3.38	3.38	16-Sep-95	3:21 PM	10.8	80.0	1		17-Sep-95	2.8
254	3.41	3.41	16-Sep-95	3:23 PM	10.8	80.0	1		17-Sep-95	1.4
255	3.46	3.46	16-Sep-95	3:25 PM	10.8	80.0	1		17-Sep-95	3.1
256	3.51	3.51	16-Sep-95	3:26 PM	10.8	80.0	1		17-Sep-95	2.8
257	3.46	3.46	16-Sep-95	3:28 PM	10.8	80.0	1		17-Sep-95	2.8
258	3.36	3.36	16-Sep-95	3:30 PM	10.8	80.0	1		17-Sep-95	3.5
259	3.30	3.30	16-Sep-95	3:31 PM	10.8	80.0	1	Sample #4	17-Sep-95	3.1
260	3.23	3.23	16-Sep-95	3:32 PM	10.8	80.0	1		17-Sep-95	2.8
261	3.43	3.43	16-Sep-95	3:34 PM	10.8	80.0	1		17-Sep-95	2.8
262	3.46	3.46	16-Sep-95	3:35 PM	10.8	80.0	1		17-Sep-95	2.8
263	3.53	3.53	16-Sep-95	3:38 PM	10.8	80.0	1		17-Sep-95	2.4
264	3.58	3.58	16-Sep-95	3:39 PM	10.8	80.0	1		17-Sep-95	0.7
265	3.50	3.50	17-Sep-95	1:31 PM	10.8	75.0	1		18-Sep-95	2.4
266	3.40	3.40	17-Sep-95	1:32 PM	10.8	75.0	1		18-Sep-95	2.4
267	3.35	3.35	17-Sep-95	1:34 PM	10.8	75.0	1		18-Sep-95	1.4
268	3.27	3.27	17-Sep-95	1:35 PM	10.8	75.0	1		18-Sep-95	1.7
269	3.25	3.25	17-Sep-95	1:36 PM	10.8	75.0	1		18-Sep-95	1.7
270	3.37	3.37	17-Sep-95	1:37 PM	10.8	75.0	1		18-Sep-95	2.1
271	3.37	3.37	17-Sep-95	1:38 PM	10.8	75.0	1		18-Sep-95	2.1
272	3.35	3.35	17-Sep-95	1:40 PM	10.8	75.0	1		18-Sep-95	0.7
273	3.27	3.27	17-Sep-95	1:41 PM	10.8	75.0	1		18-Sep-95	1.4
274	3.32	3.32	17-Sep-95	1:42 PM	10.8	75.0	1		18-Sep-95	1.0
275	3.48	3.48	17-Sep-95	1:43 PM	10.8	75.0	1		18-Sep-95	1.4
276	3.45	3.45	17-Sep-95	1:44 PM	10.8	75.0	1		18-Sep-95	0.7
277	3.35	3.35	17-Sep-95	1:45 PM	10.8	75.0	1		18-Sep-95	1.4
278	3.37	3.37	17-Sep-95	1:45 PM	10.8	75.0	1		18-Sep-95	1.0
279	3.32	3.32	17-Sep-95	1:47 PM	10.8	75.0	1		18-Sep-95	1.0
280	3.25	3.25	17-Sep-95	1:48 PM	10.8	75.0	1		18-Sep-95	1.4

SEALANT INSTALLATION LOGS

OLD VENUS MINE SITE, CARCROSS, YUKON TERRITORY
WATERLOO BARRIER SYSTEM

	SHEET PILE DATA		PRIMARY SEALANT DATA						SECONDARY DATA	
JOINT I.D. #	SHEET LENGHT (m)	PROBE DEPTH (m)	DATE	TIME	GROUT (Litres)	LINE PRES.	TANK #	COMMENTS	DATE	GROUT (Litres)
281	3.20	3.20	17-Sep-95	1:49 PM	10.8	75.0	1		18-Sep-95	1.4
282	3.14	3.14	17-Sep-95	1:50 PM	10.8	75.0	1		18-Sep-95	1.0
283	3.09	3.09	17-Sep-95	1:51 PM	10.8	75.0	1		18-Sep-95	0.0
284	3.04	3.04	17-Sep-95	1:52 PM	10.8	75.0	1		18-Sep-95	0.0
285	2.97	2.97	17-Sep-95	1:53 PM	10.8	75.0	1		18-Sep-95	0.0
286	2.94	2.94	17-Sep-95	1:54 PM	10.8	75.0	1		18-Sep-95	0.0
287	2.89	2.89	17-Sep-95	1:55 PM	10.8	75.0	1		18-Sep-95	0.0
288	2.89	2.89	17-Sep-95	1:56 PM	10.8	75.0	1		18-Sep-95	0.0
289	2.84	2.84	17-Sep-95	1:57 PM	10.8	75.0	1		18-Sep-95	0.0
290	3.07	3.07	17-Sep-95	1:59 PM	10.8	75.0	1		18-Sep-95	0.0
291	3.17	3.17	17-Sep-95	2:00 PM	10.8	75.0	1		18-Sep-95	0.0
292	3.60	3.60	17-Sep-95	2:01 PM	10.8	75.0	1		18-Sep-95	0.0
293	3.75	3.75	17-Sep-95	2:02 PM	10.8	75.0	1		18-Sep-95	0.0
294	3.72	3.72	17-Sep-95	2:04 PM	10.8	75.0	1		18-Sep-95	0.0
295	3.65	3.65	17-Sep-95	2:05 PM	10.8	75.0	1		18-Sep-95	0.0
296	3.78	3.78	17-Sep-95	2:06 PM	10.8	75.0	1		18-Sep-95	0.0
297	3.78	3.78	17-Sep-95	2:07 PM	10.8	75.0	1		18-Sep-95	0.0
298	3.75	3.75	17-Sep-95	2:08 PM	0.0	75.0	1		18-Sep-95	1.0
299	3.77	3.77	17-Sep-95	2:09 PM	10.8	75.0	1		18-Sep-95	0.7
300	3.91	3.91	17-Sep-95	2:10 PM	10.8	75.0	1		18-Sep-95	1.4
301	3.73	3.73	17-Sep-95	2:11 PM	10.8	75.0	1		18-Sep-95	1.0
302	3.81	3.81	17-Sep-95	2:12 PM	10.8	75.0	1		18-Sep-95	0.7
303	3.83	3.83	17-Sep-95	2:13 PM	10.8	75.0	1		18-Sep-95	2.1
304	3.86	3.86	17-Sep-95	2:14 PM	10.8	75.0	1		18-Sep-95	1.0
305	4.11	4.11	17-Sep-95	2:16 PM	10.8	75.0	1		18-Sep-95	1.7
306	4.03	4.03	17-Sep-95	2:18 PM	21.6	75.0	1		18-Sep-95	1.7
307	4.11	4.11	17-Sep-95	2:20 PM	10.8	75.0	1		18-Sep-95	2.4
308	4.11	4.11	17-Sep-95	2:22 PM	10.8	75.0	1		18-Sep-95	2.1
309	3.91	3.91	17-Sep-95	2:23 PM	10.8	75.0	1		18-Sep-95	1.7
310	3.87	3.87	17-Sep-95	2:25 PM	10.8	75.0	1		18-Sep-95	1.7
311	3.75	3.75	17-Sep-95	2:26 PM	10.8	75.0	1		18-Sep-95	1.4
312	3.87	3.87	17-Sep-95	2:28 PM	10.8	75.0	1		18-Sep-95	1.4
313	4.11	4.11	17-Sep-95	2:29 PM	10.8	75.0	1		18-Sep-95	2.8
314	4.07	4.07	17-Sep-95	2:31 PM	10.8	75.0	1		18-Sep-95	2.4
315	4.11	4.11	17-Sep-95	2:33 PM	10.8	75.0	1		18-Sep-95	2.8

SEALANT INSTALLATION LOGS

OLD VENUS MINE SITE, CARCROSS, YUKON TERRITORY
WATERLOO BARRIER SYSTEM

	SHEET PILE DATA		PRIMARY SEALANT DATA						SECONDARY DATA	
JOINT I.D. #	SHEET LENGHT (m)	PROBE DEPTH (m)	DATE	TIME	GROUT (Litres)	LINE PRES.	TANK #	COMMENTS	DATE	GROUT (Litres)
316	4.11	4.11	17-Sep-95	2:35 PM	10.8	75.0	1		18-Sep-95	1.7
317	4.11	4.11	17-Sep-95	2:36 PM	10.8	75.0	1	Sample #5	18-Sep-95	1.7
318	3.83	3.83	17-Sep-95	2:37 PM	10.8	75.0	1		18-Sep-95	1.7
319	3.82	3.82	17-Sep-95	2:39 PM	10.8	75.0	1		18-Sep-95	2.8
320	4.08	4.08	17-Sep-95	2:41 PM	10.8	75.0	1		18-Sep-95	2.1
321	4.10	4.10	17-Sep-95	2:42 PM	119.1	75.0	1		18-Sep-95	2.4
322	4.08	4.08	17-Sep-95	2:43 PM	10.8	75.0	1		18-Sep-95	2.1
323	4.11	4.11	17-Sep-95	2:45 PM	10.8	75.0	1		18-Sep-95	2.1
324	3.79	3.79	17-Sep-95	2:48 PM	10.8	75.0	1		18-Sep-95	2.1
325	3.78	3.78	17-Sep-95	2:50 PM	10.8	75.0	1		18-Sep-95	2.8
326	3.81	3.81	17-Sep-95	2:52 PM	10.8	75.0	1		18-Sep-95	2.4
327	3.89	3.89	17-Sep-95	2:53 PM	10.8	75.0	1		18-Sep-95	3.1
328	3.88	3.88	17-Sep-95	2:55 PM	21.6	75.0	1		18-Sep-95	3.1
329	3.84	3.84	17-Sep-95	2:57 PM	10.8	75.0	1		18-Sep-95	3.5
330	3.89	3.89	17-Sep-95	2:59 PM	10.8	75.0	1		18-Sep-95	3.5
331	4.11	4.11	17-Sep-95	3:00 PM	21.6	75.0	1		18-Sep-95	3.1
332	4.08	4.08	17-Sep-95	3:02 PM	10.8	75.0	1		18-Sep-95	3.1
333	4.08	4.08	17-Sep-95	3:04 PM	10.8	75.0	1		18-Sep-95	3.1
334	4.08	4.08	17-Sep-95	3:06 PM	21.6	75.0	1		18-Sep-95	3.8
335	4.08	4.08	17-Sep-95	3:08 PM	10.8	75.0	1		18-Sep-95	2.1
336	4.06	4.06	17-Sep-95	3:10 PM	10.8	75.0	1		18-Sep-95	3.5
337	3.96	3.96	17-Sep-95	3:12 PM	10.8	75.0	1		18-Sep-95	1.0
338	4.08	4.08	17-Sep-95	3:13 PM	10.8	75.0	1		18-Sep-95	1.7
339	4.00	4.00	17-Sep-95	3:14 PM	21.6	75.0	1		18-Sep-95	2.4
340	3.83	3.83	17-Sep-95	3:16 PM	21.6	75.0	1		18-Sep-95	1.7
341	3.83	3.83	17-Sep-95	3:18 PM	21.6	75.0	1		18-Sep-95	1.0