Keno Hill Silver District
Dry Stack Tailings Facility
Operations, Maintenance and Surveillance Manual



June 2025

Doc ID: c2785cc94a83cebef7dfe33a7142486261d3887b

File Name	KH DSTF OMS – Rev 3
Description	Guidance document for DSTF Operations, Maintenance, and Surveillance
Original Author(s)	Tetra Tech
Creation Date	2010
Approval Date	07 / 14 / 2025
Change Record Number	Revision 3

DOCUMENT CONTROL AND APPROVALS			
Name	*Title*	*Company*	*Signature*
Carlos Aguiar	Chief Operating Officer Accountable Executive Officer	Hecla	Carlos Aguiar
Brian Erickson	VP- Operations	Hecla	
Jason Palin	VP-General Manager	AKHM	
Brett Clute	Operations Manager	AKHM	B Clute
Denver Windslow	Operations Manager	AKHM	
Ryan Tilstra	Technical Services Manager & Responsible Tailings Facility Engineer	AKHM	
Coralee Kirby	Health, Safety & Environmental Manager	AKHM	
Gary Koop	Engineer of Record	Tetra Tech	
Ian MacIntyre	Deputy Engineer of Record	Tetra Tech	
Aaron Marsh	Director, Tailings Capital Projects	Hecla	

Doc ID: c2785cc94a83cebef7dfe33a7142486261d3887b

Table of Contents

1 Introduction 1
1.1 Purpose and Scope 1
1.2 OMS Manual Control 1
1.3 OMS Manual Updates 1
1.4 OMS Manual Distribution and Training 2
2 Roles and Responsibilities 3
2.1 Key Personnel 3
2.2 Competency and Training 4
2.3 Succession Planning 4
3 Facility Description 4
3.1 DSTF Overview 4
3.1.1 DSTF Design and Construction 5
3.2 Regulatory Framework 7
3.3 Site Conditions 7
3.3.1 Climate 7
3.3.2 Geology 7
3.3.3 Permafrost 7
3.3.4 Hydrology 8
3.3.5 Seismicity 8
3.4 Tailings Characteristics 8
3.4.1 Tailings Geotechnical Characteristics 8
3.4.2 Tailings Geochemical Characteristics 9
4 Operation 10
4.1 Tailings Production 10
4.2 Tailings Placement 10
4.3 Construction Equipment 11
4.4 Water Management 11
4.4.1 Surface Water Management 11

Doc ID: c2785cc94a83cebef7dfe33a7142486261d3887b

4.4.2 Phase 1 Seepage Collection and Liner System 12
4.4.3 Phase 2 Seepage Collection and Liner System 12
4.5 Environmental Protection 13
4.5.1 Vehicle Tracking 13
4.5.2 Dust 13
4.5.3 Ditches 13
4.5.4 Spills 13
4.6 Closure 13
4.7 Adverse Operating Conditions 13
4.7.1 Rainfall 13
4.7.2 Snowfall 13
4.7.3 Freezing Temperatures 14
4.7.4 Degrading Permafrost 14
4.7.5 Seismic Events 14
4.8 Health, Safety and Security 14
4.8.1 Health 14
4.8.2 Safety 14
4.8.3 Security 15
4.9 Communication and Reporting 15
4.9.1 Tailings Quantity Surveys and Tracking 15
4.9.2 Operations Reporting 15
4.9.3 Regulatory Reporting 16
5 Maintenance 17
5.1 Objective 17
5.2 Maintenance Activities 17
5.3 Documentation and Reporting 17
6 Surveillance 17
6.1 Quality Control 18
6.1.1 Quality Control Activities 18
6.1.2 Work Area Safety Inspections 18

Doc ID: c2785cc94a83cebef7dfe33a7142486261d3887b

6.1.3 Gradation and Specific Gravity Testing 18
6.1.4 Dynamic Cone Penetration Test 19
6.2 Quality Assurance 19
6.2.1 Quality Assurance Activities 19
6.2.2 Geotechnical Visual Inspections 19
6.2.3 Quarterly EOR Visual Inspections, Field Testing, and Tailings Characterization Review 19
6.3 Instrumentation and Monitoring Program 20
6.4 Water Quality and Geochemistry 20
6.5 Site Surveys 20
6.5.1 Drone Aerial Photography 20
6.5.2 Month-End Surveys 21
6.5.3 Survey Monuments 21
6.6 Trigger Action Response Plan 21
6.7 Extraordinary Inspections 21
7 Emergency Response 22
7.1 DSTF-Specific Emergency Response 22
7.2 Emergency Contacts 22
References 23

APPENDICES

Appendix A – Responsible, Accountable, Consulted and Informed Matrix and Role Definitions

Appendix B – Phase 2 Design Basis

Appendix C – Inspection Forms

Appendix D – Trigger Action and Response Plan

Appendix E – DSTF Phase 2 Instrumentation and Monitoring Plan

Doc ID: c2785cc94a83cebef7dfe33a7142486261d3887b

LIST OF TABLES

Table 2-1: Key Personnel 3
Table 3-1: DSTF Components 5
Table 3-2: DSTF Phase 1 Design Criteria 5
Table 3-3: Mayo Airport 1981-2010 Canadian Climate Normals 7
Table 3-4: Tailings Grain Size Distribution Limits 9
Table 3-5: Tailings Index Properties 9
Table 4-1: Summary of Equipment Used in the DSTF 11
Table 4-2: Periodic Reporting Requirements and Responsibility 16
Table 6-1: Quality Control Activities 18
Table 6-2: Quality Assurance Activities 19
Table 6-3: Survey Frequency 20
Table 7-1: External Agency Emergency Contacts 22

Doc ID: c2785cc94a83cebef7dfe33a7142486261d3887b

Acronyms and Abbreviations

Acronym/Abbreviations	Definition
ABA	Acid Base Accounting
AKHM	Alexco Keno Hill Mining Corp
BOB	Bottom of Borehole Elevation
DCP	Dynamic Cone Penetration Test
DGE	Design Ground Elevation
DSTF	Dry Stack Tailings Facility
EMR	Yukon Department of Energy, Mines, and Resources
EMS	Emergency Management System
EOR	Engineer of Record
ERP	Emergency Response Plan
GCL	Geosynthetic Clay Liner
GPS	Global Positioning System
GTC	Ground Temperature Cable
IMP	Instrumentation and Monitoring Plan
KH	Keno Hill
MAC,	Mining Association of Canada
MDD	Maximum Dry Density
NP	Neutralization Potential
OG	Original Ground
OMS	Operations, Maintenance and Surveillance
PGA	Peak Ground Acceleration
QA	Quality Assurance
QC	Quality Control
QML	Quartz Mining License
RACI	Responsible, Accountable, Consulted and Informed
RCMP	Royal Canadian Mounted Police
RTFE	Responsible Tailings Facility Engineer
SI	Site Investigation
TARP	Trigger-Action-Response Plan
TMT	Tailings Management Team
VP	Vice President
VWP	Vibrating Wire Piezometer
WL	Water License
YK	Yukon
YWCHSB	Yukon Workers' Compensation Health and Safety Board

Doc ID: c2785cc94a83cebef7dfe33a7142486261d3887b

OMS MANUAL REVISION HISTORY

Revision	Revision Date	Author(s)	Revision Notes
0	September 2010	EBA Engineering / AKHM	Initial Version
1	July 2023	AKHM / Tetra Tech Canada	Update format, project parties, and OMS activities to current practice
2	September 2024	AKHM	Transition to AKHM letterhead; improve language pertaining to tailings characterization and management; add additional information on operations, and maintenance; update TARPs; include updated Instrumentation and Monitoring Plan.
3	June 2025	AKHM	Updated key personnel, added DSTF Phase 2 information, and clarified placement and QA/QC procedures associated with winter placement.

Doc ID: c2785cc94a83cebef7dfe33a7142486261d3887b

1 INTRODUCTION

Alexco Keno Hill Mining Corp. doing business as Hecla Yukon (AKHM) has prepared this manual to describe activities, procedures and performance objectives for the Operation, Maintenance, and Surveillance (OMS) of the Dry Stack Tailings Facility (DSTF) at the Keno Hill Silver District Mining Operation (Keno Hill). This manual has been structured in general accordance with the guidelines entitled "Developing an Operation, Maintenance and Surveillance Manual for Tailings and Water Management Facilities" developed by the Mining Association of Canada in 2019 (MAC, 2019). This OMS manual meets Hecla's requirements for tailings storage facilities to demonstrate an ongoing commitment for safe and environmentally responsible design, construction, operation, closure, and reclamation of the DSTF.

This manual will be maintained throughout the life of the DSTF and will be updated as described in Section 1.3—OMS Manual Updates to reflect operating changes or modifications to the existing facility.

1.1 Purpose and Scope

This purpose of this manual is to identify stakeholders and their roles and responsibilities; describe key components and design criteria for the DSTF, outline procedures for operating, maintaining, and monitoring the DSTF, and describe emergency preparedness and response procedures specific to the DSTF. This manual applies to the following components at Keno Hill, including:

- Monitoring infrastructure, including monitoring wells, piezometers, and slope inclinometers.
- Surface water ditches within the DSTF footprint.
- Haul roads inside containment and adjacent to the DSTF.
- Upslope diversion ditches.
- Runoff collection sumps at the toe of the DSTF.

This manual only pertains to the operation, maintenance, and surveillance of the DSTF. Expansions or modifications to the DSTF must be designed and documented in accordance with applicable regulatory requirements, Hecla standards, and industry best practices.

Other relevant procedures include the Keno Hill Silver District Mining Operations Mine Emergency Response Plan and the Keno Hill Silver District Mining Operations Spill Contingency Plan.

1.2 OMS Manual Control

This manual is a revision of the OMS manual previously prepared by Tetra Tech.

The Responsible Tailings Facility Engineer (RTFE) is responsible for ensuring that the OMS is reviewed and updated per Section 1.3—OMS Manual Updates. Revisions to the OMS will be distributed to the Tailings Management Team for approval (Appendix A – Responsible, Accountable, Consulted and Informed Matrix and Role Definitions includes a definition of the Tailings Management Team [TMT]).

1.3 OMS Manual Updates

This OMS Manual will, at minimum, be reviewed every November and updated as required. Additional updates may be triggered by a significant event or departure from expected conditions such as:

- Completion of expansion projects
- Significant incidents (earthquake, flood, etc.; see Section 6.7)
- Performance reviews

Doc ID: c2785cc94a83cebef7dfe33a7142486261d3887b

- Changes in corporate policy
- Significant changes in personnel
- Significant changes in operations and/or design criteria

The RTFE is responsible for coordinating with members of the Tailings Management Team to identify necessary changes. The TMT must approve all updates to the OMS.

Reviewers shall consider a wide range of information, including:

- Instrumentation readings relative to defined trigger action response (TARP) levels (see Appendix D – Trigger Action and Response Plan)
- Deviations from the approved designs and/or operating procedures
- Updates to the risk registers
- Relevant advice and recommendations following site inspections, independent review, and audits
- Changes since the last review such as:
    - Site conditions
    - Risk profile of the tailings facility
    - Critical controls
    - Personnel or organizational structure
    - Methodologies and technologies for OMS activities
    - Legal or regulatory requirements
    - Closure plan
- Plans to address gaps or deficiencies in performance
- Plans for continual improvement
- Plans for the DSTF
- Practical experiences and lessons related to OMS activities
- Input from all users of the OMS manual (e.g., design engineer, and operations staff)

A letter of transmittal, clearly identifying the distribution list and changes/updates made to the OMS Manual, will accompany any updates. The OMS Manual Revision History included at the beginning of the document shall be updated each time the document is revised. Each update will receive a major revision number change, i.e., from Revision 1 to Revision 2.

The RTFE is responsible for preparing updates to the OMS manual, including coordinating with any additional resources necessary to promptly complete the required updates, and preparing the transmittal letter

1.4 OMS Manual Distribution and Training

The RTFE is responsible for distributing the OMS manual and associated transmittal letter to members of the Tailings Management Team and the Yukon Government.

Additional copies should be submitted to regulatory agencies, as required. Copies of this manual should be made available to all personnel who are responsible or involved in the operation, maintenance, and/or surveillance of the DSTF. The General Manager is responsible for ensuring that updated copies of the OMS manual are distributed to DSTF involved personnel. Out-of-date copies of the OMS manual should be archived or destroyed.

Doc ID: c2785cc94a83cebef7dfe33a7142486261d3887b

2 ROLES AND RESPONSIBILITIES

2.1 Key Personnel

Personnel in management and executive roles responsible for ensuring proper execution of DSTF OMS activities are listed in Table 2-1. The roles and responsibilities for OMS activities are summarized in the RACI matrix and associated definitions included as Appendix A – Responsible, Accountable, Consulted and Informed Matrix and Role Definitions.

Personnel designated as Accountable and/or Responsible for specific tasks comprise the Tailings Management Team (TMT). This team is comprised of individuals from Hecla and AKHM and serves as the lead coordinator of the OMS manual and is ultimately responsible to ensure all aspects of the OMS manual of the DSTF are met. Tetra Tech (formerly operating as EBA Engineering Consultants Ltd.) is the facility designer and acts as a geotechnical consultant and Engineer of Record (EoR) for AKHM.

Responsibility of the TMT and the ongoing operation, monitoring, maintenance, and surveillance of the DSTF falls under AKHM's Mine General Manager. The General Manager must ensure adequate resources (financial and manpower) are made available to ensure the safe operation of the DSTF. Undertakings at the DSTF must be prioritized and scheduled with the knowledge of the TMT.

Table 2-1: Key Personnel

Name	Title	Phone
Carlos Aguiar	Senior Vice President & Chief Operating officer & Accountable Executive Officer	caguiar@hecla.com O (208)769-4102 M (208)770-7230
Brian Erickson	VP - Operations	berickson@hecla.com O (907)789-8136 M (907)723-8995
Jason Palin	VP General Manager	jpalin@hecla.com M (406)931-0300
Brett Clute	Operations Manager	bclute@hecla.com O (406)224-1513 M (406)224-1514
Denver Winslow	Operations Manager	dwinslow@hecla.com O (867)995-3113 ext 7001 M (406)293-1740
Derrick Colquhoun	Mill Superintendent	dcolquhoun@hecla.com O (867)995-3113 ext 8001
Justin Patterson	Manager of Mines	jpatterson@hecla.com O (867)995-3113 ext 5963
Don McLaughlin	Maintenance Manager	dmclachlan@hecla.com O (867)995-3113 ext 5906
Ryan Tilstra	Technical Services Manager & Responsible Tailings Facility Engineer	rtilstra@hecla.com O (867)995-3113 ext 5966
Coralee Kirby	Health, Safety & Environmental Manager	ckirby@hecla.com O (867)995-3113 ext 5965
Gary Koop	Engineer of Record Tetra Tech	gary.koop@tetratech.com O (587)460-3542 M (780)777-5467
Ian MacIntyre	Deputy Engineer of Record Tetra Tech	Ian.macintyre@tetratech.com O (867) 668-9240 M (867) 334-2865
Aaron Marsh	Director, Tailings Capital Projects	amarsh@hecla.com O (208)769-4132 M (208)518-7304

Doc ID: c2785cc94a83cebef7dfe33a7142486261d3887b

2.2 Competency and Training

The General Manager is accountable for ensuring that all personnel working at the DSTF are properly trained to understand and implement the operation, maintenance, and surveillance requirements of the DSTF as described in this document.

2.3 Succession Planning

Changes to the TMT will occur during the life of the DSTF. The General Manager is accountable for ensuring an appropriate succession plan is in place to ensure these changes do not compromise the performance or management of the DSTF.

3 FACILITY DESCRIPTION

Keno Hill is in a remote setting approximately 460 km northeast of Whitehorse and is accessed either by land via the North Klondike and Silver Trail highways and the mine access road, or by air. The closest airstrip is in the village of Mayo, approximately 60 km southwest. The mill site and DSTF area are connected to public roads, but access is controlled as described in Section 4.8.3.

3.1 DSTF Overview

The Keno Hill mine is located about 1 km west of Keno City, Yukon, shown on Figure 1. The DSTF is located northeast of the Keno Hill mill building. As of December 2024, approximately 356,000 dry tonnes (208,800 m^3) of tailings are stored in the DSTF[1] and cover an area of approximately 3.3 hectares. The ultimate proposed DSTF capacity is approximately 450,000 m^3 or 855,000 tonnes, and will cover an area of approximately 6.5 hectares. QML-0009 authorizes the storage of 907,000 tonnes of tailings within the DSTF footprint.

The tailings are deposited outside the mill building via a conveyor stacker. Tailings are hauled from the tailings stockpile outside of the mill building to the DSTF and mechanically spread and compacted in 300 to 500 mm thick lifts to form a stacked tailings deposit.

DSTF components are summarized in Table 3-1.

[1] Tailings volumes were not reliably tracked prior to 2024, thus the estimate of approximately 190,000 m^3 is based on an average dry density of 1.8 tonnes/m^3, consistent with placing tailings at about 95% of the maximum dry density reported in Table 3-5.

Doc ID: c2785cc94a83cebef7dfe33a7142486261d3887b

Table 3-1: DSTF Components

Component	Description
Drainage blanket	• Drainage layer located at the base of the DSTF • Allows excess water from degrading permafrost to drain freely
Liner system	• Low-permeability liner and drainage system to minimize the release of tailings seepage into the environment.
Diversion berms	• Diverts surface runoff away from the DSTF and mill areas
Runoff collection ditch	• Collects surface water and seepage from the drainage blanket and directs it to the water collection pond via a sump.
Water collection sumps	• Lined water detention sumps to collect water before routing to the Mill Pond
Tailings stack	• Mechanically placed and compacted tailings
Evapo-transpirative cover	• 0.5 m-thick vegetative cover to be placed during DSTF reclamation
Monitoring instrumentation	• Instrumentation as described herein.

3.1.1 DSTF Design and Construction

Detailed Phase 1 design was completed in 2011 (EBA 2011). Phase 1b was designed as an expansion to Phase 1 to accommodate the permitted tailings volume and design was completed in 2013 (EBA 2013). Phase 1 was constructed in 2010, and Phase 1b constructed in 2023.

Preliminary design for Phase 2 of the DSTF was completed between 2013 and 2015 (EBA 2013 and Tetra Tech 2015). Detailed designs for Phase 2 East were completed in September 2024 (Tetra Tech 2024b), and detailed designs for Phase 2 West will be finalized in the third or fourth quarter of 2025. Construction of Phase 2 will be completed in three construction seasons with the first portion completed in December 2024 (Tetra Tech 2025b). Work in 2025 will include improvements to water management infrastructure, and work in 2026 will include the remaining work within the DSTF Phase 2 footprint.

The Design basis and criteria for DSTF Phase 1 are summarized in Table 3-2. The Design Basis for Phase 2 is included in Appendix B – Phase 2 Design Basis. AKHM is currently evaluating options for improving Phase 1 to meet the more stringent Phase 2 design criteria and plans to implement these improvements in 2026 and 2027.

Table 3-2: DSTF Phase 1 Design Criteria

Category	Design Criteria	Value
General Characteristics	Ultimate design capacity	Phase 1: 286,000 tonnes (125,000 m^3)
	Area	Phase 1: 2.4 ha
	Maximum height (toe to crest)	Phase 1: approximate 25 m
	Approximate Crest elevation	Phase 1: 945 m above sea level (a.s.l.)
	Typical slope	Varies between 2.5H:1V and 3.5H:1V
Hydrology	Peak flow	1/200-year 10-day freshet
Seismicity	Design earthquake	1/475-year
	Peak ground acceleration	0.146g
Stability – static analysis	Minimum factor of safety	1.2 to 1.3
Stability – pseudo-static analysis	Minimum factor of safety	1.05 to 1.0

Doc ID: c2785cc94a83cebef7dfe33a7142486261d3887b



LEGEND

- DSTF FOOTPRINT
- EXISTING SURFACE RUNOFF DITCH
- INSTRUMENTAION LOCATION

NOTE

- DRONE IMAGERY COLLECTED BY HECLA IN OCTOBER 2022

0 100m

Scale: 1:2,000 @ 11"x17"

CLIENT

Hecla MINING COMPANY

TETRA TECH

DRY-STACKED TAILINGS FACILITY
OPERATION MAINTENANCE AND SURVEILLANCE MANUAL

SITE PLAN SHOWING DSTF COMPONENTS

PROJECT NO.	DWN	CKD	REV
ENG.WARC04370-01	CB	SAM	0

OFFICE	DATE
EBA-WHSE	June 15, 2023

Figure 1

Q:\Whitehorse\Data\0201drawings\Keno\ENG.WARC04370-01 DSTF Operation Maintenance Manual\ENG.WARC04370-01 Fig.1-R0_JS.dwg [FIGURE 1] , June 16, 2023 - 10:41:21 am (BY: SWARTZ, JACOB)

Doc ID: c2785cc94a83cebef7dfe33a7142486261d3887b

3.2 Regulatory Framework

The DSTF is authorized with the following permits:

- Quartz Mining License (QML) No. QML-0009, dated November 27, 2019, issued by the Government of Yukon Department of Energy, Mines and Resources
- Water License (WL) No. QZ18-044, dated July 22, 2020, issued by the Yukon Water Board.

These licenses allow for up to 907,000 tonnes of dewatered tailings from Keno Hill to be placed at the DSTF. Regulatory requirements and approved activities at the DSTF are outlined in these licenses.

Reporting requirements are described in Section 4.9.3 Regulatory Reporting.

3.3 Site Conditions

3.3.1 Climate

Keno Hill has a subarctic climate (Koppen climate classification Dfc), characterized by long, cold winters and short, warm to cool summers. The nearest long-term climate station is at Mayo Airport, about 42 km southwest of the mine (Tetra Tech, 2025). Based on the Mayo data, mean monthly air temperatures range from approximately -14.7°C in January to 10.8°C in July, with a mean annual temperature of -3.6°C (Tetra Tech, 2025).

Table 3-3: Mayo Airport 1981-2010 Canadian Climate Normals

Parameter	Value
Daily average temperature	-3.6°C
Average annual precipitation	313.5 mm
Average annual rainfall	203.8 mm

3.3.2 Geology

Overburden in the DSTF area consists of two typical soil profiles:

- Organics, underlain by glaciofluvial gravel, underlain by bedrock; or
- Organics, underlain by sand and silt till underlain by gravel and bedrock.

Overburden thickness in historical boreholes ranged from about 1.5 m to more than 30 m. Overburden is generally thicker on the east side of the DSTF area.

Bedrock geology at Keno Hill consists of Mississippian Keno Hill Quartzite comprising the Basal Quartzite Member and overlying Sourdough Hill Member (Ensero, 2023).

3.3.3 Permafrost

Keno Hill is located near the boundary between “extensive discontinuous” and “continuous” permafrost (Natural Resources Canada, 1995), meaning that 50% to 100% of the surface is expected to be underlain by permafrost in this region.

In Phase 1, Ice rich permafrost has been observed throughout most of the footprint in the topmost 3.5 m of soil. This permafrost contains a combination of horizontally stratified ice lenses, randomly oriented ice inclusions, and non-visible excess ice (EBA, 2011).

The Phase 2 footprint contains relatively less ice-rich permafrost; isolated layers of ice-rich material are present in the topmost 2 to 4 m of soil only.

Doc ID: c2785cc94a83cebef7dfe33a7142486261d3887b

Massive ice has been encountered in several boreholes outside of the DSTF footprint to the west and north, with thickness ranging between 4 m and 15 m. The active layer near the DSTF has been observed to be as thin as 200 mm in thickness in some locations, protected by a thick organic cover. No massive ice has been encountered anywhere within the DSTF footprint.

3.3.4 Hydrology

Keno Hill is in the McQuesten River drainage area. Christal Lake is about 800 m north of the mine; the lake covers an area of about 7 ha and is the only lake near the DSTF. Christal Creek and Lightning Creek are located north and south of the mine site, respectively. In general, surface runoff uphill of the DSTF is directed around the DSTF by diversion berms; however, due to topographic and legal boundary restrictions a small area east of Phases 1 and 2 (see Figure 3-1) does report to containment.

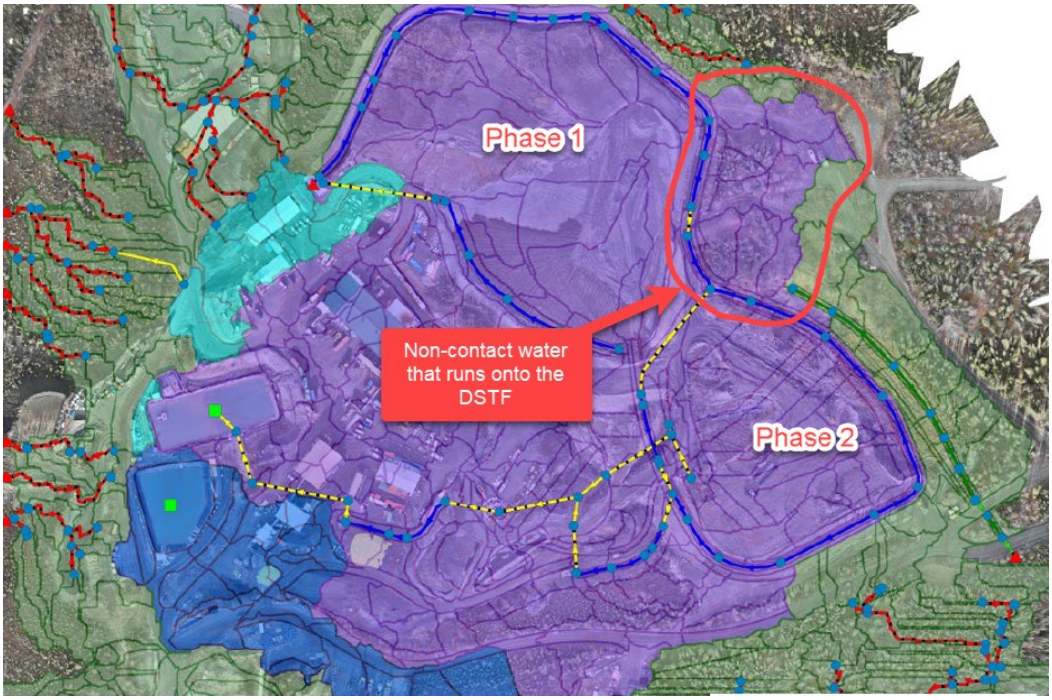

Figure 3-1: Area upstream of the DSTF Reporting to Containment

3.3.5 Seismicity

Information regarding seismicity for the Keno Hill was provided by the Canadian Geological Survey Pacific Geosciences Centre. Phase 1 of the DSTF was designed based on a peak ground acceleration (PGA) of 0.146g, corresponding to a 1/475 annual exceedance probability (AEP). Phase 2 of the DSTF was designed based on a PGA of 0.278g, corresponding to a 1/2475 AEP.

3.4 Tailings Characteristics

3.4.1 Tailings Geotechnical Characteristics

Tailings produced by the Mill generally classify as SILT, sandy to and SAND, trace clay, to a SAND and SILT, trace clay. Typical tailings gradations fall within the grain size distribution limits given in Table 3-4. Other typical geotechnical characteristics are summarized in Table 3-5.

Doc ID: c2785cc94a83cebef7dfe33a7142486261d3887b

Table 3-4: Tailings Grain Size Distribution Limits

Particle Size (mm)	% Passing (by mass)	
	Lower Limit	Upper Limit
2	100	100
0.85	100	100
0.425	99.7	100
0.25	97	100
0.15	80.8	100
0.075	55.5	95
0.0349	32.9	80
0.0226	24.6	60
0.0133	18.1	45
0.0095	14.4	40
0.0068	10.9	35
0.0034	5.4	20
0.0014	2.5	10

Table 3-5: Tailings Index Properties

Material Property	Value
Typical as-produced moisture content[2]	10% to 20% by weight
Maximum dry density (MDD) / optimum moisture content	1885 kg/m^3 to 1960 kg/m^3 at 17% to 12% moisture
Permeability at 95% MDD	9.7 x 10^{-8} m/s
Effective friction angle, ϕ’	32°
Effective cohesion, c’	20.2 kPa

The effective friction angle and effective cohesion given in Table 3-5 are based on the results of Direct Shear testing completed on tailings falling within the gradation band given in Table 3-4 compacted at 95% MDD.

3.4.2 Tailings Geochemical Characteristics

The tailings currently being produced from Bermingham ore are potentially acid-generating (PAG) with a neutralization potential ratio (NPR) of less than 1. Elevated concentrations of metals such as arsenic, antimony, cadmium, lead, manganese, silver, and zinc are also present,

Additional geochemical information about the tailings is included in the current version of the AKHM Tailings Characterization Plan. The results of the tailings characterization program are included with the annual report for Water License QZ18-044.

AKHM reviews the data with consultants to determine if any modifications in handling are required.

[2] Geotechnical moisture content calculated as the mass of the water divided by the mass of the solids.

Doc ID: c2785cc94a83cebef7dfe33a7142486261d3887b

4 OPERATION

4.1 Tailings Production

The Keno Hill mill currently processes 375 to 560 tonnes of ore per day, approximately 80% of which are converted to tailings. Currently, all the tailings are disposed in the DSTF, though AKHM is currently developing plans to place approximately 40% of the tailings underground as paste backfill.

4.2 Tailings Placement

AKHM uses 30-ton articulated haul trucks to transport the tailings from the Mill to the DSTF where tailings are placed and compacted. Typical equipment used for operating the DSTF is listed in Section 4.3. Tailings shall be placed per the following procedures:

- Tailings shall be placed in maximum 500 mm lifts and track-walked several times with the dozer with at least:
    - Six passes (forward and backward is one pass), during above-freezing temperatures,
    - Eight passes (forward and backward is one pass), during below-freezing temperatures.
- Unless conditions are such that the work cannot be done safely, the tailings shall be compacted and "sealed" with a smooth-drum compactor by completing a minimum of two overlapping passes (forward and backward is one pass) using the vibratory function. The compactor shall have an operating weight of at least 12,000 kg.
- Tailings compaction shall be confirmed as described in Sections 6.1 and 6.2.
- If tailings are too wet to achieve target compaction, tailings may be managed per one of the following options:
    - Blend the wet tailings with dry tailings until they are sufficiently dry to achieve target compaction.
    - "Farm" the tailings in dry weather by spreading in thin lifts and reworking with the dozer until acceptable moisture contents are achieved and the tailings can be compacted to target densities.
    - Place the wet tailings at a location in the DSTF that has been demonstrated by the EOR to not result in compromising the stability of the DSTF.
- New tailings shall not be placed on uncompacted tailings.
- Tailings may not be placed on snow, ice, organics, and/or other deleterious materials.
- Tailings shall be placed and compacted as soon as practicable after production. If tailings are allowed to freeze prior to compaction, the location of the uncompacted tailings shall be recorded, and the tailings shall be excavated and recompacted per the proceeding requirements after tailings have thawed.
- The top surface of the tailings shall be graded to prevent pooling or uncontrolled runoff down steep slopes.
- Runoff water should be channeled to perimeter ditches through appropriately constructed and lined internal ditches.
- The DSTF shall be constructed with compacted outside slopes that are no steeper than 3.25H:1V, unless otherwise approved by the Engineer of Record. Slopes during operations may be steeper than maximum design slopes if future operation or slope work is planned.
- Snow dumps shall be located to minimize erosion during thaw conditions.

The Technical Services Manager is accountable for developing placement plans per these objectives. The Operations Manager is accountable for execution.

Doc ID: c2785cc94a83cebef7dfe33a7142486261d3887b

4.3 Construction Equipment

Table 4-1 summarizes equipment used for operating and maintaining the DSTF.

Table 4-1: Summary of Equipment Used in the DSTF

Equipment	Purpose
30-ton articulated haul trucks	Moving material to and from the facility
Bulldozer	Spreading and compacting tailings, maintenance
Smooth-drum vibratory compactor	Compact and seal placed tailings
Fixed frame dump truck	Moving material to and from the facility
Various loaders and excavators	Moving material; facility maintenance
Other miscellaneous equipment of various types and sizes	Varies

4.4 Water Management

4.4.1 Surface Water Management

All stormwater and freshet runoff originating within the DSTF is collected in perimeter ditches and routed to water collection sumps. Runoff from Phase 1 and Phase 1B currently reports to a water collection sump at the western corner of Phase 1 where it is piped to the Mill Pond. Runoff from Phase 2 East currently reports to the depression between the western toe buttress and an internal shear berm and is pumped to a ditch that reports to the Mill Pond. In 2025, following the completion of the improvements to the Mill Pond, the existing depression will be filled with tailings and water will report via ditches and a culvert to the Mill Pond. Water in the Mill Pond is treated and stored in the Flame & Moth Pond for subsequent discharge.

Perimeter ditches are or will be designed and constructed per the requirements in Appendix B – Phase 2 Design Basis.

Except as noted in Section 3.3.4, water upgradient of the facility is diverted around the facility by outer diversion berms, as practicable.

An overview of primary surface water management system components are shown in Figure 4-1. Additional details are presented in the Flame and Moth Water Management Plan (Tetra Tech 2025c).

Doc ID: c2785cc94a83cebef7dfe33a7142486261d3887b

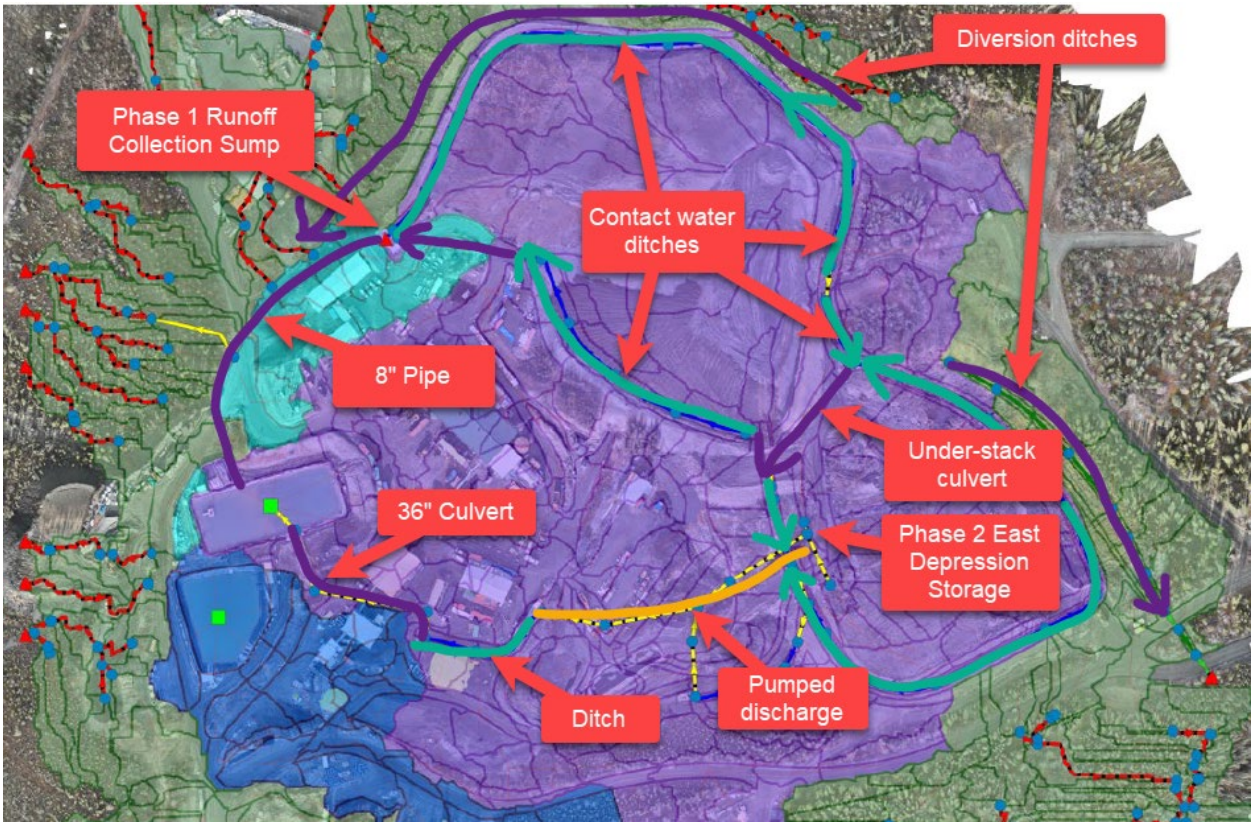

Figure 4-1: Major Surface Water Conveyance Systems

4.4.2 Phase 1 Seepage Collection and Liner System

The seepage collection system in Phase 1 and Phase 1b consists of a minimum 500 mm-thick drainage blanket placed directly on the native soils overlain by (from bottom to top) a geosynthetic clay liner (GCL), a geonet, and non-woven geotextile. Original ground was generally left undisturbed to slow permafrost degradation.

The drainage blanket was designed to allow water from permafrost degradation to drain from the DSTF foundation. The GCL is a low permeability barrier between the tailings and the blanket drain and is intended to minimize the flow of tailings leachate into the foundation. The geonet was designed to minimize the generation of above-liner pore pressures by providing a relatively high-permeability conduit for pore water to drain to the perimeter of the facility and into the perimeter drainage ditches.

4.4.3 Phase 2 Seepage Collection and Liner System

The seepage collection system for Phase 2 is similar to Phase 1, but with the following differences (see Appendix B – Phase 2 Design Basis for more detail):

- The below-liner drainage blanket includes means for water quality collection and testing. Water will be released to the environment if it meets applicable criteria, otherwise it will be collected for treatment.
- The geonet and non-woven geotextile above the GCL are overlain by granular material as a ballast to prevent the GCL from hydrating prior to being confined
- An above-liner drain system is included for collecting above-liner seepage for water quality testing and treatment.

Doc ID: c2785cc94a83cebef7dfe33a7142486261d3887b

4.5 Environmental Protection

4.5.1 Vehicle Tracking

Vehicles entering the DSTF shall only exist the DSTF via the designated haul route. They may not exit onto other perimeter roads, either public or private.

4.5.2 Dust

Dust shall be controlled by covering final slopes as soon as practicable with the approved evapo-transpirative cover (see Section 4.6), and by limiting snow removal to active placement areas only. Other dust abatement and monitoring requirements are described in the AKHM Dust Abatement and Monitoring Plan.

4.5.3 Ditches

Ditches shall be maintained to keep proper freeboard for potential storms and melt runoff.

Annual maintenance to remove snow and ice prior to freshet must be done in a manner that does not destroy the ditch liner. Damage to ditch liners shall be reported immediately to the EOR, and repairs made as soon as practicable.

4.5.4 Spills

Spills, or release of fuel or other contaminate outside containment intended for that purpose, shall be managed per the Spill Contingency Plan.

4.6 Closure

An evapo-transpirative cover shall be placed on final outside slopes as soon as practicable. The cover must provide a suitable growth medium for revegetation. The cover should be at least 0.5m thick, be comprised of a mixture of granular and organic material supportive of vegetative growth. The cover should be placed loose, graded, track-walked up and down the slope to prevent erosion, and seeded with the approved seed mix.

At final closure, slopes will be recontoured as necessary to promote positive drainage and prevent ponding.

4.7 Adverse Operating Conditions

4.7.1 Rainfall

Surface runoff management facilities shall be designed and maintained such that runoff is not directed to active placement areas, or uncontrolled down steep slopes.

Tailings surfaces shall be sealed with the vibratory roller as soon as practicable after placement to ensure proper runoff and minimize saturation of the tailings.

4.7.2 Snowfall

The following procedures shall be followed for managing snow:

- Do not mix snow with tailings
- Minimize the area from which snow is cleared (tailings covered with snow do not generate dust, and minimizing snow removal minimizes the potential for rework)
- Do not place tailings over snow.

Doc ID: c2785cc94a83cebef7dfe33a7142486261d3887b

- Minimize, as practicable, scalping and mixing tailings into the snow during snow removal activities.

Cleared snow shall be stockpiled in designated snow stockpile areas as practicable. Snow cleared from the DSTF shall not be stockpiled outside the DSTF.

4.7.3 Freezing Temperatures

Icy slopes can be a safety hazard. Personnel working in the DSTF shall be trained to operate in icy conditions and shall be made aware of the limitations of the equipment.

Dozers and other equipment shall not be operated on a slope higher than 3 m if the ground is frozen. This likely means that dozers cannot be used to place final slopes in the winter: tailings will have to be placed in relatively flat lifts and an excavator used to pull the slope to finish grade.

4.7.4 Degrading Permafrost

Permafrost degradation often results in ground settlement, evidenced by uneven or progressive sinking and the formation of tension cracks. While rapid thawing of foundation permafrost can lead to DSTF instability, gradual degradation is expected under normal operating conditions and does not necessarily pose a stability concern. However, if left unaddressed, permafrost degradation can cause stability issues. For example, cracks formed by settlement may collect water, leading to increased water pressure in the foundation and subsequent stability problems.

Suspected evidence of permafrost degradation shall be reported to the EOR within one week of identification. The EOR shall evaluate the evidence and within one week provide direction on whether the degradation can be immediately repaired, or if additional investigation is warranted.

Per the TARP, ground temperature readings indicating thawing conditions below original ground trigger a review by the EOR to determine if mitigation is required.

4.7.5 Seismic Events

Earthquakes can trigger slope failures and settlement of the DSTF. Appendix B – Phase 2 Design Basis describes seismic design criteria. Section 6.7 defines when inspections should be conducted following a seismic event.

4.8 Health, Safety and Security

4.8.1 Health

Personnel working with and around tailings are required to maintain appropriate hygiene practices. Tailings contain lead; therefore, hands should be washed, or gloves donned, before eating, using tobacco products, etc.

Personnel are required to shower and change clothes in the provided “dry” facilities at the end of shift to avoid lead contamination in the camp and cafeteria facilities.

4.8.2 Safety

Access roads within the DSTF that pose a risk of vehicle roll-over shall be guarded to prevent rollovers and to delineate the traveled way for trucks and other equipment.

Frozen slopes can be a safety hazard. Personnel placing tailings should be aware of icy conditions and the limitations of the equipment to traverse slopes in these conditions. Note that when the tailings are

Doc ID: c2785cc94a83cebef7dfe33a7142486261d3887b

thawing the top few inches of the tailings surface can be thawed but ice can still be present at depth which creates very slippery conditions.

4.8.3 Security

Access to site is restricted to authorized site personnel through the usage of signs and gates where appropriate. Additional details are included in the AKHM Traffic Management Plan.

4.9 Communication and Reporting

4.9.1 Tailings Quantity Surveys and Tracking

Monthly surveys of the DSTF are performed by the surveyor using drone footage, aerial photogrammetry and/or conventional survey with GPS equipment. Monthly surveys are compared against previous surveys to determine placement volumes. Mill records, mine backfill records, and truck counts are reconciled against monthly survey volumes. Records of placement volumes are tracked in Propeller, an aerial photogrammetry service, and in production tonnes are traced in the Met Balance.

Volumetric surveys shall be provided to the EOR for their review.

4.9.2 Operations Reporting

The periodic reports completed for the DSTF are listed in Table 4-2. Roles that are consulted and informed relative to these activities are listed in Appendix A – Responsible, Accountable, Consulted and Informed Matrix and Role Definitions.

Doc ID: c2785cc94a83cebef7dfe33a7142486261d3887b

Table 4-2: Periodic Reporting Requirements and Responsibility

Report Type	Accountable Party	Responsible Party	Frequency	Saved Location
Production Quantity	Operations Manager	Mill Superintendent	Monthly	Available in the "Met Balance"; contact the Sr. Metallurgist for access
Placement quantity	Technical Services Manager	Site Surveyor	Monthly	O:\Shared\YK\TECH SERVICES\DSTF\Tailings Monthly Report
Work Area Safety Inspection*	Operations Manager	Site Services Superintendent	Daily	O:\Shared\YK\TECH SERVICES\DSTF\ Weekly Inspections
Geotechnical Visual Inspections**	Technical Services Manager	Sr. Geotechnical Engineer	Monthly	O:\Shared\YK\TECH SERVICES\DSTF\ Weekly Inspections
Quarterly EOR Inspection	Technical Services Manager	Engineer of Record	Quarterly	O:\Shared\YK\TECH SERVICES\DSTF\Weekly, Monthly, Quarterly Inspections - Geotechnical\Quarterly
Annual EOR Inspection**	Environmental Manager	Engineer of Record	Annually	O:\Shared\YK\ENVIRONMENT AND WATER\ Environment Mgmt\Reporting\ Annual\ AKHM QML\ 2023_Annual_QML\Final\Appendices

* Work area safety inspections are completed as a Quality Control activity as described in Section 6.1
** Geotechnical Visual Inspections and EOR Inspections are completed for Quality Assurance purposes as described in Section 6.2

4.9.3 Regulatory Reporting

Reporting required per the regulatory framework given in Section 3.2 includes the QML Annual Report and the Annual Geotechnical Inspection Report. The QML Annual Report is prepared by the Keno Hill operation.

The Environmental Manager is accountable for required regulatory reporting.

4.9.3.1 Quartz Mining License Reporting

Schedule D of the QML defines reporting requirements applicable to the DSTF.

4.9.3.2 Annual Geotechnical Inspection

The EOR is responsible for completing an annual geotechnical inspection of the DSTF. The annual inspection shall assess:

- The condition of the DSTF and accessory structures.
- Tailings placement activities
- Maintenance and surveillance activities
- Other aspects of the DSTF Relevant to the EOR.

Doc ID: c2785cc94a83cebef7dfe33a7142486261d3887b

5 MAINTENANCE

5.1 Objective

The primary objective of maintenance activities is to enable tailings placement and minimize erosion and sediment generation within the facility.

5.2 Maintenance Activities

Maintenance activities include:

- Ditch and culvert maintenance, including keeping ditches/culverts clear of obstructions such as snow and ice, sediment, rocks, and other debris.
- Slope maintenance to minimize and/or repair water and wind erosion.
- Surface regrading to fill in voids and cracks caused by degrading permafrost.
- Surface water management.
- Other repairs and work as required following adverse conditions or significant events (see Section 4.7).

Unless necessary for safety reasons or to support operations, the following maintenance activities should be completed in warm and dry periods:

- Repairing erosion features
- Regrading permafrost-degradation-induced deformation
- Placing the evapo-transpirative cover
- Removing ruts and depressions that collect water
- Installing ditches

Maintenance activities may also be undertaken as required by the Trigger Action and Response Plan (TARP; see Appendix D – Trigger Action and Response Plan). Required timelines for implementing maintenance activities are as follows:

- Yellow: investigate and commence repairs as appropriate within 6 weeks
- Orange: investigate and commence repairs as appropriate within 3 weeks
- Red: immediately investigate and commence repairs as appropriate

5.3 Documentation and Reporting

Maintenance activities shall be described in the Work Area Safety Inspection reports and summarized in the Geotechnical Monthly Visual Inspection reports (see Table 4-2).

6 SURVEILLANCE

An effective surveillance program is an essential preventative control to manage risks of a potential failure or otherwise unwanted event. Surveillance program records can be used to optimize facility operation and demonstrate the DSTF is complying with regulatory and permit requirements. Surveillance includes both routine and event-driven activities.

The objective of the DSTF surveillance program is to confirm that:

- The DSTF is being operated consistent with design requirements and assumptions.

Doc ID: c2785cc94a83cebef7dfe33a7142486261d3887b

- The DSTF is maintained in a stable condition over the short and long term (geotechnical stability).
- Water management system components are effective and maintained as designed.
- Geochemical and hydrologic processes are defined and meet expectations with respect to limiting oxidation and leaching and minimizing the effects on the receiving environment.

Surveillance activities undertaken to meet these objectives are summarized in the following sections. Responsibilities are defined in Appendix A – Responsible, Accountable, Consulted and Informed Matrix and Role Definitions.

6.1 Quality Control

6.1.1 Quality Control Activities

Quality Control (QC) activities are intended to verify that tailings are placed in the DSTF in accordance with design requirements. These activities are listed in Table 6-1.

Table 6-1: Quality Control Activities

Quality Control Activity	Completion Frequency	Review Frequency
Work area safety inspection	Daily	Monthly
Gradation with Hydrometer (ASTM D6913 & D422)	Monthly	Monthly
Specific Gravity (ASTM D854)	Monthly	Monthly
Dynamic Cone Penetration (DCP) Test	See Section 6.1.4	Monthly
Mill Tailings Moisture Content (ASTM D2216)	Daily	Monthly

Visual inspections and DCP tests by operations and site supervisory personnel are intended to document compliance with operating procedures and design requirements.

6.1.2 Work Area Safety Inspections

The Work Area Safety Inspection form is included in Appendix C – Inspection Forms. The Site Services Superintendent is accountable for ensuring Site Services supervisors are properly trained to complete the inspections and DCP testing.

The purpose of these inspections is to determine if there is evidence of deterioration or potential failure modes, including:

- Surface deformation such as cracking, bulging, depressions or sinkholes.
- Seepage from the stack, including new seepage areas, or changes in existing areas or rate, or turbidity in seepage water.
- Tailings or abnormally turbid water immediately downstream of the DSTF.
- Water or tailings flowing down the stack.
- Movement or breach of a component in the facility

6.1.3 Gradation and Specific Gravity Testing

The Mill Manager is responsible for coordinating and collecting monthly tailings samples as described in the Tailings Characterization Plan. A split of this sample shall be provided to the EOR for gradation and specific gravity testing.

Doc ID: c2785cc94a83cebef7dfe33a7142486261d3887b

6.1.4 Dynamic Cone Penetration Test

DCP tests shall be completed on a minimum of every 2 meters of placed tailings.

In freezing conditions, DCPs shall be completed in unfrozen tailings. If DCPs cannot be completed, the locations where tailings could not be completed due to inclement weather shall be noted on the Work Area Inspection forms and the area(s) tracked for future review.

Tailings shall be compacted such that the Depth Penetration Index (DPI) is 3 cm/blow or less between a depth of 0.3 to 1.0 m. However, this target will be reviewed, and updated as required, as part of the EOR's Quality Assurance responsibilities described in Section 6.2.

6.2 Quality Assurance

6.2.1 Quality Assurance Activities

Quality Assurance (QA) activities are intended to verify QC activities, and includes a review of collected QC information, and duplication of field density tests by the EOR during quarterly site visits. Additional field density tests are also completed per Table 6-2.

Table 6-2: Quality Assurance Activities

Quality Assurance Activity	Completion Frequency
Geotechnical Visual Inspections (by AKHM)	Monthly
EOR Visual Inspections	Quarterly
Dynamic Cone Penetration Test	Quarterly if conditions allow
Sand Cone Density Test (ASTM D1556)	Quarterly if conditions allow
Standard Proctor (ASTM D698)	Quarterly
Shear strength testing	As required to confirm shear strength

6.2.2 Geotechnical Visual Inspections

The Technical Services Manager is accountable for completing monthly visual inspections and will assign an appropriately qualified geotechnical engineer to complete the inspection. The inspection will be documented on the form included in Appendix C – Inspection Forms.

The inspector will also review the Work Area Safety Inspections (see Section 6.1.2) for compliance with this manual and to help guide his or her inspection activities.

6.2.3 Quarterly EOR Visual Inspections, Field Testing, and Tailings Characterization Review

The Technical Services Manager is accountable for ensuring the EOR completes quarterly visual inspections of the DSTF. The EOR inspection will have the same scope as the annual geotechnical inspection described in Section 4.9.3.2, though the deliverable can be in a simplified form.

During quarterly inspections, the EOR is responsible for completing DCPs and field density tests to confirm the density test results obtained by Operations (see Section 6.1.4) and to verify that the DPI target provided in Section 6.1.4 is appropriate.

To provide a benchmark for density test results, the EOR is also responsible for collecting and completing a Standard Proctor test to confirm that the tailings MDD and optimum moisture content is consistent with expectations.

The EOR will compare tailings characterization results (gradations, standard Proctor results) from QA/QC activities with the tailings characteristics described in Section 3.4, and will include the comparison in

Doc ID: c2785cc94a83cebef7dfe33a7142486261d3887b

their quarterly inspection reports. These reports will include a statement confirming whether the tailings characterization results are consistent with design assumptions. If the results are materially different from expectations, the EOR will complete additional shear strength tests (e.g., direct shear tests or triaxial tests) and provide recommended changes in operating procedures as necessary to ensure the tailings can be placed in the DSTF without compromising design criteria.

6.3 Instrumentation and Monitoring Program

The instrumentation and monitoring program for the DSTF includes a network of geotechnical instruments installed in Phase 1 and Phase 2 East to monitor potential failure modes identified in the Failure Modes and Effects Analysis (Tetra Tech 2024b). Instrumentation includes ground temperature cables (GTCs) to monitor changes in foundation soil temperatures and permafrost conditions; slope inclinometers (SIs) to detect ground movement within the stack and foundation; survey monuments to track surficial movement; and vibrating wire piezometers (VWPs) to measure porewater pressures within the tailings and foundation (Tetra Tech 2024a included as Appendix E – DSTF Phase 2 Instrumentation and Monitoring Plan (IMP).

Instrumentation data is collected according to the schedule defined in the IMP, with most GTCs and VWPs connected to dataloggers. Those not connected to dataloggers are recorded manually per the frequency in the IMP. SIs are monitored monthly for the first 12 months after installation, then quarterly thereafter unless significant movement is observed (Tetra Tech 2025d). All instrumentation data is reviewed against established trigger action response plans (TARPs; see Section 6.6).

6.4 Water Quality and Geochemistry

Tailings solids acid-base-accounting (ABA) testing is completed weekly by an accredited laboratory on a composite sample collected from the daily 24-dried metallurgical samples.

Other information pertaining to geochemical characterization is included in the AKHM Tailings Characterization Plan.

Water quality monitoring and regulatory requirements for natural watercourses and mine components other than the DSTF are defined in the Keno Hill Silver District Mining Operations Monitoring, Surveillance and Reporting Plan.

6.5 Site Surveys

Site surveys include:

Table 6-3: Survey Frequency

Surveillance Activity	Completion Frequency	Review Frequency
Drone Aerial Photography	Monthly	Monthly
Month-End Survey	Monthly	Monthly
Monument Surveys	As required and practicable given snow cover	As required

6.5.1 Drone Aerial Photography

Drone aerial photography flights are completed for the DSTF areas at least monthly, or more frequently to support operational/construction activities and provide input to the tailings planning processes. The aerial imagery is hosted by Trimble Propeller and access is managed by the Technical Services Manager.

Doc ID: c2785cc94a83cebef7dfe33a7142486261d3887b

6.5.2 Month-End Surveys

Drone photogrammetry data or conventional survey techniques are used to develop month-end surveys for the entire facility. These surveys are used to calculate placement volumes for tailings and other materials and the information is compared to Mill production reports.

6.5.3 Survey Monuments

Survey monuments have been installed at various locations around the DSTF to monitor areas showing signs of slope movement (e.g., the presence of apparent tension cracks).

The process for adding new survey monuments is generally as follows:

1. Site inspection (see 6.1.1 and 6.2.1) identifies new evidence of movement such as new tension cracks.
2. Evidence of movement is reviewed with Technical Servies Manager and EOR, and decision is made on whether new monuments are required.
3. Technical Services Manager, in coordination with the EOR, identifies locations for new monuments as appropriate and identifies monitoring frequency, accounting for potential snow cover.
4. Site surveyor sets new monuments
5. Site surveyor surveys monument points at determined frequency and reports findings to Technical Services Manager and EOR for review.
6. EOR provides guidance on additional action, including increasing or decreasing monitoring frequencies, as required.

6.6 Trigger Action Response Plan

If surveillance activities described in previous sections identify deviations from expected performance, responses shall be managed as described in Appendix D – Trigger Action and Response Plan (TARP).

6.7 Extraordinary Inspections

Extraordinary inspections should be completed following any significant event such as a high rainfall event (more 50mm in 24 hours), a seismic event with a magnitude greater than 5 occurring within 150 km of the site, or evidence of significant ground movement such as the appearance of new or extensive tension cracks.

The inspection shall be documented on the inspection form include in Appendix C – Inspection Forms, or its equivalent, and actions shall be taken as described in Appendix D – Trigger Action and Response Plan.

Doc ID: c2785cc94a83cebef7dfe33a7142486261d3887b

7 EMERGENCY RESPONSE

Site-wide emergency response procedures for Keno Hill are defined in the Keno Hill Silver District Mining Operations Mine Emergency Response Plan (ERP). The ERP includes:

- Roles, responsibilities, and accountability for emergency response,
- Applicable legislation and standards,
- Training requirements,
- Emergency response procedures,
- Communication procedures, and
- Site security information

The ERP applies to emergencies across the Keno Hill site, including the DSTF.

7.1 DSTF-Specific Emergency Response

Specific "Red Alert" triggers which require activation of the ERP are defined Appendix D – Trigger Action and Response Plan. If a Red Alert is trigged, the response typically includes:

- Evacuation of personnel working in the affected area,
- Restricting access to the affected area,
- Promptly notifying the EMR and TMT, and
- Investigation and mitigation as directed by the EOR.

7.2 Emergency Contacts

AKHM and EOR emergency contacts are listed in Table 2-1.

External emergency contacts are listed in Table 7-1.

Table 7-1: External Agency Emergency Contacts

Agency	Contact Information
Yukon EMS Dispatch	867-667-3333
Yukon EMS Non-Emergency Dispatch	867-456-8401
Mayo Nursing Station	867-996-4444
Whitehorse Hospital	867-393-8700
RCMP Mayo	867-996-5555
RCMP Search & Rescue	867-667-5555
Yukon Conservation Officer Dispatch	867-667-8005
Yukon Wildland Fire Control	888-798-3473
Mayo Wildland Fire Control	867-996-3200
Mayo Wildland Fire Control On-Call Duty Officer (weekends/ after hours)	867-332-1988
Mayo Fire Department	867-996-2222
Yukon Coroner Service	867-667-5317
YWCHSB Chief Mine Safety Officer	867-667-3726 (office) 867-332-2669 (cell)
YWCHSB Mine Inspector	867-689-6074
YWCHSB Mine Rescue Coordinator	867-335-0204
YWCHSB 24hr Emergency Line	800-661-0443
YWCHSB Report an Accident	867-689-5949

Doc ID: c2785cc94a83cebef7dfe33a7142486261d3887b

REFERENCES

Access Mining Consultants Ltd. (1996). United Keno Hill Mines Limited – Site Characterization. Issued March 1996. File No. UKH/96/01.

Clearwater Consultants Ltd (2009). Memorandum CCL-UKHM-2

EBA Engineering Consultants Ltd. (EBA). (2011). Detailed Design – Dry Stacked Tailings Facility – Keno Hill District Mine Site, Yukon. Report prepared for Alexco Resources Corporation, issued May 2011. EBA File No. W14101178.011

EBA Engineering Consultants Ltd. (2013). Dry Stacked Tailings Facility – Expansion Design Report Keno Hill District Mill Site, Yukon. Report prepared for Alexco Resource Corporation, issued February 27, 2013. EBA File No. W14103122.

Ensero Solutions Ltd. (Ensero). (2020). Geochemical Characterization of Bermingham Locked Cycle Tailings. Report prepared for Alexco Keno Hill Mining Corporation, issued September 9, 2020.

Ensero Solutions Ltd. (Ensero). (2023). Keno Hill Silver District QML-0009 Site Characterization Report – Final Report. Report prepared for Alexco Keno Hill Mining Corporation, issued February 28, 2023.

Natural Resources Canada (1995). Canada Permafrost [map]. 1:7,500,000. The National Atlas of Canada 5th Edition, Queens Printer, Ottawa, Canada.

Tetra Tech EBA Inc. (Tetra Tech). (2015). Dry Stacked Tailings Facility Phase II Expansion Preliminary Design – Revision I – Keno Hill District Mill Site, YT. Report prepared for Alexco Resource Corporation, issued June 2, 2015. Tetra Tech File No. W14103548-01.

Tetra Tech. (2023). Phase II Expansion Detailed Design, DSTF, Revision 2. Report prepared for Hecla Mining Company, issued September 18, 2024. Tetra Tech File No. 704-ENG.WARC04307-01.

Tetra Tech (2024a). Instrumentation and Monitoring Plan – DSTF Phase 2 East, Keno Hill Mine, YT. Report prepared for Alexco Keno Hill Mining Corp, issued August 22, 2024. Tetra Tech File No. 704-ENG.WARC04415-10.

Tetra Tech. (2024b). Failure Modes and Effects Analysis, DSTF Phase II, Keno Hill Mine, Yukon. Report prepared for Hecla Mining Company, issued November 29, 2024. Tetra Tech File No. 704-ENG.WARC04415-10.

Tetra Tech. (2025a). 2024 Site Investigation Program Instrumentation Summary. DSTF Phase 1 – Keno Hill Mine, YT. Report prepared for Alexco Keno Hill Mining Corp, issued date March 4, 2025.

Tetra Tech. (2025b). Phase 2 East Dry Stack Tailings Facility Construction Record Report, Keno Hill mine, YT. Report prepared for Alexco Keno Hill Mining Corp, issued May 21, 2025. Tetra Tech File No. 704ENG.WARC0441511.

Tetra Tech (2025c). Flame and Moth Water Management Plan. Keno Hill District Mine Site, Yukon. Report prepared for Alexco Keno Hill Mining Corp, issued June 2025. Tetra Tech File No. ENG.WARC04673-04.

Doc ID: c2785cc94a83cebef7dfe33a7142486261d3887b

Tetra Tech (2025d). Instrumentation Data Collection Guide. DSTF Phase 1 and Phase 2 East, Keno Hill Mine, Yukon. Technical Memo prepared for Alexco Keno Hill Mining Corp., issued June 2025. Tetra Tech File No. 704-ENG.WARC04673-05.002.

Doc ID: c2785cc94a83cebef7dfe33a7142486261d3887b

Appendix A – Responsible, Accountable, Consulted and Informed Matrix and Role Definitions

Doc ID: c2785cc94a83cebef7dfe33a7142486261d3887b

1 NOTES:

1. There is only one Accountable person per line-item per Mining Association of Canada (MAC) Operations, Maintenance and Surveillance (OMS) guidelines[1].
2. This is a living document and can be changed.
3. This will be the instrument used to hold personnel accountable for operation of the TDF.

2 ROLES

2.1 ACCOUNTABLE EXECUTIVE OFFICER

The Accountable Executive Officer (AEO) is the most senior operations executive within Hecla, reporting directly to the President & CEO and is the executive accountable for tailings management and the development and implementation of the systems needed for responsible tailings management.

2.2 VP GENERAL MANAGER

The VP General Manager (VP-GM) of the mine reports to the AEO and is accountable for the implementation of the OMS.

2.3 ENGINEER OF RECORD

An Engineer of Record (EOR) is a licensed professional engineer in good standing, licensed in the jurisdiction in which a facility (dam, tailings facility, or components critical to the safety thereof) is located, who is responsible for providing assurance to Hecla and other stakeholders, in a manner consistent with the Standard of Care defined below, that the facility:

i. Has been designed in accordance with performance objectives and indicators, applicable guidelines, standards, and regulatory requirements;
ii. Was constructed, or is being constructed, according to the design, or that any changes to the design implemented during construction are likewise consistent and appropriate to the design intent; and
iii. Is performing and being operated, throughout the life-cycle, in accordance with the design intent, performance objectives and indicators, applicable guidelines, standards, and regulatory requirements.

“Standard of Care” means that the services rendered with the level of care, skill and diligence ordinarily provided by members of the same profession in the performance of comparable services for projects of a similar nature at the time and place that the services are rendered.

[1] https://mining.ca/wp-content/uploads/2019/03/MAC-OMS-Guide_2019.pdf

Doc ID: c2785cc94a83cebef7dfe33a7142486261d3887b

2.4 Tailings Management Team (TMT)

The TMT consists of the AEO; GM; Health, Safety & Environmental Manager; Operations Manager; Mill Superintendent; Technical Services Manager; and Hecla's Director, Tailings Capital Projects. The TMT is responsible for ensuring that requirements in the OMS manual are met.

3 Planning & Design

Planning and design activities include environmental assessment work, pre-design, and detailed design completed before construction.

3.1 Alternative Assessment

Analysis of options for increasing tailings storage capacity. May include expansion of existing facility, or construction of new facility.

3.2 Owner's Design Criteria

Requirements of defined by Owner for various components of TDF. Must be approved by the Tailings Management Team.

3.3 Design Assumptions

Also referred to as a design basis. A detailed list of design assumptions for each construction element. This list is prepared by the design engineer and approved by the TMT as appropriate.

3.4 Site Investigation

Subsurface geotechnical, geological, and/or hydrotechnical subsurface investigations.

3.5 Regulatory Compliance & Permitting

Work to ensure that plans and specifications are developed and implemented consistent with regulatory and permit requirements.

4 Construction

Development of detailed designs, acquisition of required construction permits, and completion of construction activities.

4.1 Engineering documents

Issue For Construction (IFC) Plans and Specifications and post-construction as-builts.

4.2 QA/QC

Quality Control (QC) to verify work is completed per plans and specifications. Quality Assurance (QA) conducted by the Engineer of Record to verify Quality Control.

Doc ID: c2785cc94a83cebef7dfe33a7142486261d3887b

4.3 Management of Change (MOC)

Process to communicate and get approval from Tailings Management Team for changes to construction plans and specification.

4.4 Construction Management

Management of construction contract and work completed by the contractor to construct project. Coordination with contractor and operations teams.

4.5 Regulatory Permitting

Process of acquisition of required permits to complete construction activities.

4.6 Regulatory Compliance

Work to ensure construction activities comply with regulatory and permit requirements.

5 Operations

Work to operate, maintain, and surveil the constructed facility.

5.1 OMS Manual Updates & Review

Effort to review and update the OMS manual as defined in the document.

5.2 OMS Training

Training of new personnel on the content of the OMS manual.

5.3 Tailings Placement Plan

Plans produced to specify where tailings are placed in the stack.

5.4 Operations – Quality Control

5.4.1 Daily Work Area Safety Inspections

Work area inspections completed by operators in the facility.

5.4.2 Quality Control Testing

Quality Control testing completed by the Operations team to determine if tailings are being placed consistent with OMS and design requirements. Includes ongoing monitoring of placement and compaction, and periodic in situ and laboratory testing.

5.4.3 Periodic Tailings Sample Collection & Testing

Collection of samples as required by the OMS manual and the Tailings Characterization Plan.

5.4.4 Mill Tailings Moisture Content Collection

Collection and testing of tailings samples for moisture content.

Doc ID: c2785cc94a83cebef7dfe33a7142486261d3887b

5.5 Operations – Quality Assurance

5.5.1 Geotechnical Monthly Visual Inspections and Testing

Visual inspection of DSTF with focus on active placement area by a qualified individual per the requirements in the OMS manual.

Also includes review of Quality Control information collected per Section 5.4.

5.5.2 Quarterly EOR Inspections & Testing

Quarterly review of Quality Control information collected per Section 5.4, and instrumentation and monitoring data collected per Section 5.6.

5.6 Instrumentation Installation and Maintenance

5.6.1 Instrumentation Installation and Maintenance

Installation and maintenance of instrumentation including data loggers and other infrastructure necessary to collect real time data associated with the DSTF. Instrumentation may include the following:

- Vibrating Wire Piezometers,
- Slope Inclinometers or Shape Arrays,
- Flow Meters,
- Wind stations,
- Tipping buckets,
- Barometric Pressure, and
- Data loggers to collect data.

5.6.2 Instrumentation Monitoring & Data Management

This item includes management of collected data.

5.6.3 Instrumentation Data Reviews & Reporting

Periodic review of collected instrumentation data per requirements in the OMS.

5.6.4 Water Quality Monitoring & Reporting

Collection of water quality data per applicable permits and regulatory requirements, and reporting on the same.

5.7 Operations – Other

5.7.1 Management of Change (MOC)

Process to communicate and obtain approval from TMT to make changes in how the DSTF is operated.

5.7.2 Regulatory Permitting

Process of renewing and updating applicable permits and site Management Plans.

5.7.3 Regulatory Compliance

Process of maintaining compliance with applicable permits and Management Plans. The monitoring of the site and QA/QC activities described above verifies regulatory compliance.

Doc ID: c2785cc94a83cebef7dfe33a7142486261d3887b

5.7.4 Annual Geotechnical Inspections

Completion of annual geotechnical inspections required by the Quartz Mining License

5.7.5 Internal Monthly Reporting

Collection of survey data and compilation of DSTF surface followed by comparison to previous month's surface to obtain volume of materials placed in the DSTF over the month. Volumes are reconciled against tonnage of tailings produced in the mill and tonnage moved to the DSTF and underground.

5.7.6 Budgeting

Annual effort to budget for the coming year. Includes personnel salaries, consultant services, purchase of instrumentation, purchase and maintenance of construction equipment and other equipment such as pumps.

5.7.7 Special Inspection

Visual inspection of DSTF following significant seismic or precipitation event as defined in the OMS manual.

6 CLOSURE & RECLAMATION

6.1 REGULATORY COMPLIANCE AND PERMITTING

Maintenance of applicable financial instruments for the reclamation and closure of the property.

6.2 CLOSURE PLAN UPDATES

Substantive changes to the operations of the mine can trigger closure plan updates. These changes are identified during Planning and Design. However, minimally the plan is reviewed annually and as otherwise required by regulation and permits.

6.3 CLOSURE MANAGEMENT

Closure and reclamation efforts ensure long-term protection of the environment and human health & safety; stability of tailings; related facilities and structures; and comply with all relevant permit conditions or stipulations.

7 REVIEW & REPORTING

Review of key documents governing the operation of the DSTF. Review of instrumentation and water quality data from the TDF and surrounding areas and compilation of reports summarizing the data. Includes submission to governing organizations.

7.1 CORPORATE TAILINGS MANAGEMENT STANDARD REVIEW

Review of standard as changes are made or additions added.

Doc ID: c2785cc94a83cebef7dfe33a7142486261d3887b

7.2 ANNUAL OMS AND RISK REGISTER REVIEW

Annual review of OMS and risk register by the TMT to ensure context and usefulness of the documents. Changes will be made as necessary to make sure it reflects the way the DSTF is operated. This is a companion activity to that described in Section 5.1.

7.3 INDEPENDENT REVIEW

Periodic independent reviews of TDF designs, major expansions, and active placement of stack are to be performed by an Independent Tailings Review Board (ITRB). The ITRB consists of at least 2 senior professional engineers selected from Hecla Corporate and independent from the design engineer and AKHM.

Doc ID: c2785cc94a83cebef7dfe33a7142486261d3887b

	Accountable Executive Officer	VP General Manager	Director - Indigenous Affairs & Community Relations	Operations Manager	Mill Superintendent	Technical Services Manager	Health, Safety & Environmental Manager	Project Manager	Construction Manager	Sr. Environmental Coordinator	Surveyor	Site Services Superintendent	EOR	Yukon Government	Construction Contractor
Planning & Design (New or Expanded TDF)															
Alternative Assessment Studies	I	A	I	C	C	R	C	R	---	C	---	C	R	I	---
Owner's Design Criteria	A	C	I	C	C	C	C	R	---	C	---	C	C	I	---
Design Assumptions	I	I	---	C	C	C	C	A	---	C	---	C	R	---	---
Site Investigation	---	I	---	I	I	C	C	A	---	C	C	C	R	C	---
Regulatory Compliance & Permitting	I	I	C	C	C	C	A	R	---	C	C	C	I	C	---
Construction															
Engineering Documents	---	I	I	C	C	C	C	A	I	C	C	C	R	C	C/I
Quality Control / Quality Assurance (QC/QA)	---	I	I	---	I	I	I	A	R	I	---	---	R	---	I
Management of Change (MOC)	---	A	---	C	C	C	C	R	R	C	I	C	C	I	C
Construction Management	---	I	---	I	I	C	I	A	R	C	---	---	I	---	C
Regulatory Permitting	I	A	C	C	C	C	R	C	C	C	---	I	I	R	---
Regulatory Compliance	I	A	I	I	I	C	R	C	C	C	---	C	I	I	R
Operations															
OMS Manual Updates & Review	I	A	I	C	C	R	C	---	---	C	---	C	C	---	---
OMS Training	---	A	---	C	R	C	C	---	---	C	---	C	---	---	---
Tailings Placement Plan	---	I	---	I	A	R	I	---	---	I	C	C	C	---	---
Tailings Quantity Tracking	---	I	---	I	A	R	I	---	---	I	R	I	I	---	---
Operations - Quality Control															
Daily Work Area Safety Inspections	---	---	---	A	I	I	I	---	---	---	---	R	---	---	---
Quality Control Testing	---	---	---	---	I	A	---	---	---	---	C	R	I	---	---
Periodic Tailings Sample Collection & Testing	---	---	---	A	R	C	C	---	---	---	C	I	I	---	---
Mill Tailings Moisture Contents (Provided by Mill)	---	---	---	A	R	I	---	---	---	---	---	I	I	---	---
Operations - Quality Assurance															
Geotechnical Monthly Visual Inspections & Testing	---	---	---	A	I	R	---	---	---	---	C	I	I	---	---
Quarterly EOR Inspections & Testing	---	I	---	I	I	A	I	---	---	---	C	I	R	---	---
Operations - Instrumentation & Monitoring															
Instrumentation Installation and Maintenance	---	---	---	A	I	R	R	--	--	I	I	I	I	---	---
Instrumentation Monitoring & Data Management	---	---	---	A	I	R	R	---	---	C	C	I	---	I	---
Instrumentation Data Reviews & Reporting	---	---	---	A	---	R	C	--	--	C	C	---	I	---	---
Water Quality Monitoring & Reporting	---	I	---	I	I	I	A	---	---	R	---	I	---	I	---
Operations - Other															
Management of Change (MOC)	---	I	I	A	R	R	C	---	---	C	C	C	C	I	---
Regulatory Permitting	---	I	I	I	C	C	A	---	---	R	---	C	I	R	---
Regulatory Compliance	---	A	I	R	R	R	R	----	----	C	---	C	I	I	---
Annual Geotechnical Inspections	---	I	I	C	C	C	A	----	----	C	---	C	R	I	---
Internal Monthly Reporting	---	A	---	C	C	R	R	---	---	C	---	I	I	---	---
Budgeting	I	A	---	R	R	C	R	---	---	C	---	C	---	---	---
Special Inspection	I	I	I	A	R	R	I	---	---	I	C	I/C	R/C	---	---
Site Surveys (topographic, GPS, or aerial)	---	---	---	---	I	A	---	---	---	I	R	I	I	---	---

Doc ID: c2785cc94a83cebef7dfe33a7142486261d3887b

	Accountable Executive Officer	VP General Manager	Director - Indigenous Affairs & Community Relations	Operations Manager	Mill Superintendent	Technical Services Manager	Health, Safety & Environmental Manager	Project Manager	Construction Manager	Sr. Environmental Coordinator	Surveyor	Site Services Superintendent	EOR	Yukon Government	Construction Contractor
Closure & Reclamation															
Regulatory Compliance and Permitting	I	A	I	R	R	R	R	----	----	C	---	C	I	C	---
Closure Plan Updates	I	A	I	C	C	R	R	C	---	C	---	---	C	I	---
Closure Management	I	A	I	C	I	C	R	---	---	C	---	C	C	I	---
Review & Reporting															
Corporate Tailings Management Standard Review	A	R	---	R	R	C	R	---	---	R	---	---	I	---	---
Annual OMS and Risk Register Review	I	A	---	R	R	R	R	---	---	R	---	R	R	---	---
Annual QML Reporting	---	I	I	C	C	C	A	---	---	R	---	---	C	---	---
Annual Geotechnical Inspection	---	I	I	C	C	C	A	---	---	C	---	---	R	---	---
Independent Tailings Review Board	A	I	I	C	C	C	C	---	---	C	---	C	C	---	---

R = Responsible = Those who do the work to achieve the task. At least one role must be Responsible for each task, although others can be delegated to assist in the work required.
A = Accountable = Who is accountable for the success of the task and is the decision-maker? They have the final decision.
C = Consulted = Who needs to be consulted for details and additional information on requirements? These person(s) must be consulted before a decision is made.
I = Informed = Who needs to be kept informed of major updates? Typically senior leadership.

*** An independent review board reviews the faculty every third year.

Doc ID: c2785cc94a83cebef7dfe33a7142486261d3887b

Appendix B – Phase 2 Design Basis

Doc ID: c2785cc94a83cebef7dfe33a7142486261d3887b

Dry Stack Tailings Disposal Facility – Phase 2

Project Design Basis

Rev.	Date (D-MM-YYYY)	Author (Name)	Description/Remarks
0	6/10/24	Aaron Marsh	Initial draft for Signature
1	7/29/24	Aaron Marsh	Revisions per ITRB Input, and adjustments to clarity
2	12/14/24	Aaron Marsh	Adjusted formatting, added content relative to Phase 2 West, and the Mill Pond and Flame & Moth Pond Raises Designs.

Prepared by: Aaron Marsh, P.E.
Hecla Manager – Tailings
Dry Stack Tailings Disposal Facility Phase 2 Project Manager

14 December 2024

Doc ID: c2785cc94a83cebef7dfe33a7142486261d3887b

Approved By:

_____	_____
Aaron Marsh Manager – Tailings DSTF Phase 2 Project Manager Hecla	Shawn Pelechaty Mill Manager AKHM
_____	_____
Kevin Eppers Environmental Manager AKHM	Coralee Kirby Health & Safety Manager AKHM
_____	_____
Ryan Tilstra Technical Services Manager AKHM	Jason Palin VP General Manager AKHM
_____	_____
Brian Erickson VP Alaska & Yukon Operations Hecla	Martin Stearns Director—Environmental Operations Hecla
_____	_____
Carlos Aguiar COO & Accountable Executive Hecla	Gary Koop, P.Eng. Engineer of Record Tetra Tech Canada
_____	
Ian MacIntyre, P.Eng. Deputy Engineer of Record Tetra Tech Canada	

Doc ID: c2785cc94a83cebef7dfe33a7142486261d3887b

INTRODUCTION

This document presents the key project information in a consolidated design basis (CDB) for the dry stack tailings facility (DSTF) owned and operated by Alexco Keno Hill Mining Corp (AKHM) within the Keno Hill Silver District (KHSD), located near Keno City, Yukon. This document forms the basis for design for

1 REFERENCE INFORMATION

1.1 Design and Key Technical Reports

Key design reports are summarized in Table 1-1 and Table 1-2 summarizes key Knowledge Base[1] documents for the DTSF as of the date of Design Basis Memorandum (DBM) issue. Table 1-3 lists applicable permits.

Table 1-1: Key Dry Stack Tailings Disposal Facility Desing Reports

Report Issue Date (Author)	Report Title
2024 (TT)	Phase II Expansion Detailed Design – Revision 1. Dry Stack Tailings Facility. Keno Hill District Mine Site, Yukon.

Table 1-2: Key Knowledge Base Documents

Report Issue Date (Author)	Report Title
Table to be added to and updated at a later time.	

1.2 Regulatory Permits, Standards, and Guidelines

AKHM has obtained permits from the following Regulatory Agencies and First Nations groups:

- Yukon Workers' Safety and Compensation Board (WCB)
- Yukon Department of Energy, Mines and Resources (EMR)
- Yukon Water Board (YWB)
- The First Nation of Nacho Nyak Dun (NND)

[1] A Knowledge Base document is one that supports the safe management of a tailings facility by describing the fundamental elements of the site, including site characterization and baseline knowledge of the social and environmental context (GISTM 2020).

Doc ID: c2785cc94a83cebef7dfe33a7142486261d3887b

The following permits/approvals pertain to the DSTF, all of which are managed by AKHM.

Table 1-3: Applicable Permits

Entity	Permit	Revision Date
EMR	Quartz Mining License QML -0009	27 November 2019
YWB	Water License QZ18-044	22 July 2020
EMR	AKHM Waste Rock Management Plan Rev 6.5	October 2021
EMR	AKHM Mill Development and Operations Plan Rev 7	May 2024
EMR	AKHM Tailings Characterization Plan Rev 7	October 2023
EMR	AKHM Tailings Management Plan Rev 2	October 2024
Table to be added to and updated at a later time.		

Additional key regulations, standards and design guidelines are summarized in Table 1-4.

Table 1-4: Regulations, Standards, and Guidelines References

Regulation / Standard / Guideline	Agency / Author	Document	Version and/or Date
Regulation	WCB	Part 15 – Surface and Underground Mines or Projects	May 2006
Guideline	EMR	Guidelines for Mine Waste Management Facilities	Feb 2023
Table to be added to and updated at a later time.			

2 CHANGES TO KEY DESIGN BASIS WITH TIME

Some key components of the design basis have changed with time as the DSTF has grown in size, Hecla and AKHM have adjusted their risk tolerances alongside improvements to industry best management practices. A summary of key changes to the design basis is provided in Table 2-1.

Table 2-1: Summary of Key Changes to the Design Basis

Design Basis Item	Item	History of Design Basis
Multiple	Multiple	Minor modifications to criteria pertaining to DSTF. Added criterial for the Mill Pond and Flame & Moth Pond Raise designs.

Doc ID: c2785cc94a83cebef7dfe33a7142486261d3887b

3 DESIGN BASIS

The following tables presents the key project design basis that shall be used when designing modifications to the DSTF and associated appurtenances.

3.1 General Criteria

3.1.1 Survey & Property Information

Design Basis Item		Design Basis	Reference / Source
.1	Coordinate System	• NAD83 CSRS / UTM Zone 8N	AKHM
.2	Units	• Metric units	AKHM
.3	Existing Ground Topography	• 2014 LiDAR	AKHM
.4	Property Line Setbacks	• Excavation near property line: Excavation in sand, clay, or gravel or other unconsolidated material shall not be carried on within a setback distance of 5 m (16 ft.) horizontal from the vertical plane of the property boundary. • Excavation at toe of face: Material excavated from the inside edge of the setback shall be cut so that the slope is not steeper than 1.5 horizontal to 1.0 vertical, and any material that sloughs in this area shall be left in place.	WCB
.5	Right of Way	• The Duncan Creek Road Right of Way (ROW) is 60 m, centered on the road centerline. • The Keno City Dump Access Road ROW is 60 m, centered on the road centerline. • Tailings shall not be stored within the ROW. • The outboard edge of the contact water ditch may be positioned at the edge of the ROW, i.e. 30 m from the road centerline. See Figure 3-1.	AKHM

Doc ID: c2785cc94a83cebef7dfe33a7142486261d3887b

3.1.2 General Site Management

Design Basis Item		Design Basis	Reference / Source
.1	Borrow material	• Borrow material used outside containment shall be Non-Acid and Metals Leaching (NAML) material that complies with AKHM's Waste Rock Management Plan and does not pose a long-term risk for acid or metals leaching. • Preference shall be given to alluvial deposits to minimize long-term geochemical risks. • Mine waste rock shall not be used for construction outside containment unless approved by AKHM's VP-General Manager, and Hecla's Chief Operating Officer.	AKHM
.2	Laydown	• The design shall provide estimated size of required construction laydown. The laydown area shall account for: o Borrow material processing and stockpiling of: ▪ Produced material, ▪ Oversize fraction, and ▪ Undersize fraction. o Stockpile areas for cut timber.	AKHM

3.1.3 Definitions

Design Basis Item		Design Basis	Reference / Source
.1	Contact Water	• Water that comes into contact with tailings, concentrate, or other byproducts of the mining and milling process that would produce water that does not meet applicable water quality standards.	AKHM
.2	Inflow Design Flood	• The Inflow Design Flood (IDF) is the largest flood event that can be safely passed. • All structures for which a failure could result in significant safety issues, or operational or structural damage that could curtail production for more than 5 days shall be designed to safely pass the IDF.	AKHM
.3	Environmental Design Flood	• The Environmental Design Flood (EDF) is the largest flood that can be managed without release of untreated contact water to the environment.	AKHM
.4	Critical Duration	• The critical duration of a storm event is defined as the length of time that the inflow into the system exceeds the outflows from the system. • Different components of the water management system may have different critical durations. For example, the critical duration of a conveyance channel is going to extremely short to reflect that ditches are to be designed to convey peak flows. On the other hand, the critical duration for a storage pond will be longer because the storage capacity of the pond buffers peak flows such that discharge capacity can be less than the inflow capacity.	AKHM
.5	Freeboard	• Vertical distance between water level and lowest edge of adjacent containment	AKHM

Doc ID: c2785cc94a83cebef7dfe33a7142486261d3887b

3.1.4 Climate and Hydrology

Design Basis Item		Design Basis	Reference / Source
.1	Precipitation data source	• Site data as appropriate, supplemented with information from the Mayo Airport.	AKHM
.2	Catchment Area	• Hydrology assessments shall use the approximate catchment area depicted in Figure 3-2. Changes in the catchment limits shall be approved by AKHM.	AKHM

3.1.5 Design Storms

Design Basis Item		Design Basis	Reference / Source

.1	Contact Water IDF – Permanent Structures	• Larger of:
		  • 200-yr critical duration event (EMR Table 4-2 for a Class II facility)
		  ○ 500-yr (0.5% Annual Exceedance Probability [AEP]) peak instantaneous flow[2] (AKHM).
			EMR/AKHM

.2	Contact Water IDF – Temporary Structures	• The IDF for temporary structures shall be selected such that the probability of the event occurring over the life of the temporary facility is less than or equal to the probability of the permanent structure IDF occurring in a 75-year period. • The IDF return period shall not be less than 10 years.	AKHM
.3	Contact Water EDF – Permanent Structures	• 100-yr critical duration event (EMR Table 4-2 for a Class II facility)	EMR
.4	Contact Water EDF – Temporary Structures	• The EDF for temporary structures shall be selected such that the probability of the event occurring over the life of the temporary facility is less than or equal to the probability of the permanent structure EDF occurring in a 75-year period. • The EDF return period shall not be less than 5 years.	AKHM
.5	Contact Water Ice Design Event	• 1/5-year (20% AEP) ice-buildup as practicable. Implications of this requirement shall be reviewed and approved by AKHM prior to implementation in the design.	AKHM
.6	Non-Contact Water Diversion System Design Flood event	• 500-yr (0.2% AEP) peak instantaneous flow	AKHM

[2] "Peak instantaneous flow" means the peak of the estimated flood hydrograph, as opposed to a flow that is averaged over a period of time.

Doc ID: c2785cc94a83cebef7dfe33a7142486261d3887b

3.1.6 General Surface Contact Water Management

Design Basis Item		Design Basis	Reference / Source
.1	Catchment Area	• Design catchment area for the EDF and IDF flood routing is to include: o DSTF containment limits. o Existing and planned access roads within and adjacent to the DSTF. o Any adjacent areas with contact water that currently naturally grade towards the DSTF containment limits. o Other areas as directed and approved by AKHM.	AKHM
.2	Contact Water Routing	• Collect and route contact water to the Mill Pond via an appropriate system of sumps, ditches, and pipelines. Use gravity systems whenever practicable.	AKHM
.3	Ditch Geometry	• Minimum grade 1% but maximize grade where practicable to reduce sedimentation and ice build-up in ditches. • V-ditches where practicable to minimize sediment and ice-build up. • Maintain a minimum of 300mm of freeboard above design flows; freeboard shall be increased as necessary to account for ice buildup.	AKHM
.4	Ditch Lining Material	• New ditches shall be lined with reinforced polypropylene or other poly-based liner. GCL shall not be used unless approved by AKHM. • Ditch lining material shall be protected from equipment damage (does not supersede confinement requirements for GCL, if applicable).	AKHM
.5	Ditch Maintenance	• Ditches shall be provided with an adjacent accessway (3m wide at cross slope between 5% and 10%) to allow ditches to be cleaned with an excavator. •	AKHM

Doc ID: c2785cc94a83cebef7dfe33a7142486261d3887b

3.1.7 Utilities

Design Basis Item		Design Basis	Reference / Source
.1	All water-bearing utilities	• Non-pressure pipes shall have a minimum grade 1%; increase in areas where settlement is expected. • Non-pressure pipes shall be designed to flow half-full at maximum design flows.	AKHM
.2	Utilities that convey contact-water	• All utilities that convey contact-water shall be leak-tight if located outside of containment. • Gravity pipes and culverts conveying contact water should not be pressurized.	AKHM
.3	Buried Utilities	• Unless otherwise stated, designs shall account for traffic loading from largest vehicle reasonably expected to be onsite. • Designs shall account for deadloads from current and reasonably foreseeable future activities, e.g., if the height of the DSTF is increased to geometric limits. • Shall be sized to convey the largest anticipated flow, including reasonably foreseeable future actions that may increase the required capacity.	AKHM
.4	Frost Protection	• Frost protection shall be provided for any buried pipeline (contact or non-contact water) that may otherwise be expected to freeze	AKHM
.5	Utility penetrations of containment systems	• Utilities that penetrate containment systems (e.g., geomembrane liner) must be designed to create a water-tight seal. • If multiple penetrations are required, penetrations shall be spaced at appropriate intervals to allow for installation of pipe boots, seals, or other systems, as appropriates. • Liner penetrations shall be avoided as practicable.	AKHM

3.1.8 Instrumentation

Design Basis Item		Design Basis	Reference / Source
.1	Instrumentation cables	• Cables, lysimeter tubes, and other similar “cords” shall be consolidated as practicable and routed to termination points at the perimeter of the facility. • Individual cables/cords shall be permanently labeled to ensure accurate connections and data recording.	AKHM
.2	Instrumentation termination points	• The locations for instrumentation termination points shall be approved by AKHM. • Termination points shall be provided with appropriate visual indicators and guarding to minimize the risk of equipment damage. • Multiple termination points are acceptable if approved by AKHM.	AKHM

Doc ID: c2785cc94a83cebef7dfe33a7142486261d3887b

3.2 Tailings Stack Criteria

3.2.1 Geometric Requirements

Design Basis Item		Design Basis	Reference / Source
.1	Ultimate DSTF elevation	• Stack shall be designed to the maximum geometric limits subject to other requirements described herein and approval by the Yukon Government	AKHM
.2	Ultimate DSTF crest width	• Min. 20 m for placement of material.	AKHM
.3	Ultimate DSTF outer slope	• Ultimate DSTF Maximum Outer Slope: As required to obtain minimum factors of safety (see Section 3.2.3). • Benches shall not be constructed unless necessary for geotechnical stability; if required, benches shall have a cross slope of not less than 5% to facilitate drainage.	AKHM
.4	Capacity	• The capacity of the DSTF (Phase 1 and Phase 2) shall not exceed 907,000 metric tonnes, calculated using an appropriate in-place dry-unit weight recommended by Engineer and confirmed by AKHM.	AKHM/QML

3.2.2 Access

Design Basis Item		Design Basis	Reference / Source
.1	Purpose	• Allow vehicles to enter DSTF Phases 1 and 2 without tracking tailings outside containment. • Able to accommodate the following vehicle types: o 40-tonne articulated haul trucks o Light vehicles o Tracked equipment	AKHM
.2	Access	• Access to the placement area must be from the west side of the facility. Vehicles may not enter and exit the facility on the east side. • Design shall include locking gates to prevent unauthorized transition between DSTF and perimeter “clean” roads.	AKHM
.3	Grade	• Max 12% grade.	AKHM
.4	Road Cross Slope	• Uniform cross slope towards an appropriate water conveyance system. • Min 5%, max 8%.	
.5	Road Width	• Minimum 6m clear, or as approved by AKHM for design vehicle turning radii.	AKHM
.6	Guarding	• Space shall be provided to construct guardrails, jersey barriers, or berms along edges where there is danger of vehicle rollover. o Guardrails/Jersey barriers require 1 m width o Berms shall be at least as tall as mid-axel height of largest design vehicle— assume berm width is three times the height.	AKHM
.7	Design Speed	• 25 km/h	AKHM

Doc ID: c2785cc94a83cebef7dfe33a7142486261d3887b

3.2.3 Geotechnical Stability

Design Basis Item		Design Basis	Reference / Source
.1	Design Geometry	• Stability analyses shall consider the potential for vertical expansion of the DSTF up to the maximum geometric limits allowed by outside slope limits and minimum crest width.	AKHM
.2	Factors of Safety – Two-dimensional (2D)	• Allowable static FS during initial construction (with no risk of breach or flow failure: ≥ 1.3 (AKHM). • Allowable operating and long-term static FS: ≥ 1.5 (AKHM) • Post-earthquake ≥ 1.2 (AKHM) • If post-earthquake limit equilibrium analysis results in a FS < 1.2, then conduct full dynamic deformation analysis using an appropriate software (e.g., FLAC). If results from the FLAC deformation analysis show acceptably low deformation, then an FS between 1.0 and 1.2 is acceptable provided, however, that the final FS meets applicable regulatory requirements. Acceptably low deformation must be decided on a case-by-case basis with final approval by the Accountable Executive Officer. (AKHM) • Pseudo-static > 1.0, if applicable. (EMR)	AKHM/EMR
.3	Factors of Safety – three-dimensional (3D)	• 3D analysis may be used in design where the presence of confinement is well supported by site investigations and is expected to have a notable influence on stability in that area. • There is no standard industry guidance for 3D Factor of Safety criteria. Therefore, this will be assessed specific to each analysis based on the specific conditions and uncertainty of the area in question.	AKHM
.4	Maximum Design Earthquake (MDE)	• Expected performance of the tailings stack under the MDE load: No major collapse and/or uncontrolled release of tailings. Damage to infrastructure and disruption to operations may occur, necessitating repairs. • Operations Return period: 2,475 years (2% probability of occurrence in 50 years). (EMR) • Closure same as operations unless long-term performance of the liner system is required to manage seepage from the facility, in which case the design event is the Maximum Credible Earthquake (MCE). (EMR)	AKHM/EMR
.5	Operating Basis Earthquake (OBE)	• Expected performance of the tailings stack under the OBE load: Remain functional with no major repairs to key infrastructure or components (e.g. liner system). • Return period: 475 years (10% probability of occurrence in 50 years). • Only applicable for component of the DSTF where a deformation analysis is required to justify design criteria.	AKHM

Doc ID: c2785cc94a83cebef7dfe33a7142486261d3887b

.6	Permafrost Degradation	• Design shall anticipate differential settlement due to permafrost degradation and shall design applicable components (e.g., ditches, benches) to accommodate anticipated settlement. • Minimum FS for differential settlement estimates: 3.0. The implications of this requirement shall be discussed with AKHM prior to implementing any design changes. • Design shall minimize, to the extent practicable, long-term requirements for managing and repairing the effects of differential settlement.	AKHM

Doc ID: c2785cc94a83cebef7dfe33a7142486261d3887b

3.2.4 Groundwater & Seepage Management

Design Basis Item		Design Basis	Reference / Source
.1	Containment System	• Tailings shall be underlain by a containment system consisting of a low-permeability liner with above- and below-liner drainage. Unless otherwise approved by AKHM, new foundation liners shall linear low-density polyethylene (LLDPE). • Adequate protection shall be provided to the low-permeability liner to prevent damage caused by aggregates (e.g., angular particles damage the liner). • The liner shall be capable of withstanding differential movement associated with permafrost degradation and consolidation of any foundation materials not removed during construction. • "Containment" is defined as the space above the liner and within the inside edge of the liner anchor trench. • Details shall be provided describing how new containment systems are to be tied into existing systems. • Designs must specify the minimum cover thickness over the liner and the maximum equipment size allowed on the protected liner.	AKHM/EMR
.2	Groundwater	• The design shall incorporate methods to monitor, and collect as necessary, water from the below-liner drain system.	AKHM
.3	Monitoring	• The design shall incorporate methods for monitoring the effectiveness of the containment and drainage systems.	AKHM
.4	Above and Below Liner Drains	• Foundation drainpipes to be designed so that in the event of complete failure of the pipe, the other components of the drain will be able to pass the long-term design flow. • Drains shall be installed as required to prevent excessive uplift from the foundation or cross-containment gradients into the foundation. • Designs shall provide the ability to separate above and below liner/foundation drain flows to maintain the ability to keep the source waters separated for testing and management.	AKHM
.5	Drain Systems	• The design flow for drain systems shall be at least 10 times greater than the anticipated flow rate. • Drain systems shall include redundant components so that if one component (e.g., pipe) fails, the secondary component (e.g., surrounding drain gravel) has adequate capacity to convey the design flows. • Buried pipes shall be designed such that they shall not deform more than 7.5% under expected loads (Plastic Pipe Institute).	AKHM

Doc ID: c2785cc94a83cebef7dfe33a7142486261d3887b

3.2.5 Sumps Adjacent to the DSTF

Design Basis Item		Design Basis	Reference / Source
.1	Sump Capacity	• Sump size shall be minimized with contact water routed to the Mill Pond as practicable.	AKHM
.2	Sediment Storage	• Invert of outlet pipe shall be 300 mm above base of pond to provide sediment storage capacity. • Operations, Maintenance, and Surveillance (OMS) manual shall include requirement to monitor and clean out sumps to minimize the potential for sediment transport to the mill pond.	AKHM
.3	Vehicle Access	• Vehicle access shall be provided such that the entire base of the sump is within 6 m of the adjacent edge of travel way (accounting for appropriate guarding) to allow a vac truck to remove the sediment from the pond. Exceeding the 6 m requirement must be specifically authorized by AKHM. • Access roads must have a minimum clear drivable width of 4 m on straightaways, and 5 m at corners.	AKHM
.4	Pond Bottom Grade	• The base of the pond shall have a minimum slope of 5% towards the decant end to facilitate cleaning and sediment removal.	AKHM

3.3 Pond Criteria

3.3.1 General Requirements

Design Basis Item		Design Basis	Reference / Source
.1	Design Life	• Permanent sumps and ponds: 75-year design life. Closure designs to be developed in the future. • The design life for temporary sumps and ponds shall be based on a reasonably conservative estimate of the expected length of time the structure will be in in operation; design life shall be approved by AKHM.	AKHM
.2	Definitions of Containment	• Physical containment shall be provided around the sumps to the IDF water level plus minimum freeboard. Physical containment can be provided by any barrier to prevent surface flow release. • Top of seepage containment (e.g., top of low-permeability barrier): EDF water level plus 300 mm.	AKHM
.3	Freeboard	• Maintain a minimum of 300mm of freeboard above IDF water level; freeboard shall be increased as necessary to account for ice buildup. • Freeboard shall account for potential post-construction settlement (static or seismic related).	AKHM

Doc ID: c2785cc94a83cebef7dfe33a7142486261d3887b

3.3.2 General Pond Access Requirements

Design Basis Item		Design Basis	Reference / Source
.1	Modification to Western Access Road	• The elevation of the access road cannot be raised so that the grade from the pond to the western edge of the adjacent laydown is more than 10 percent, sloping away from the ponds, and the access road alignment may not shift westward more than 2 meters.	AKHM
.2	Embankment Shared with Flame & Moth Pond	• The clear width of embankment crest between the Mill Pond and Flame and Moth Pond shall be at least 4 m to allow vehicle access. This will necessitate a vertical raise to the embankment.	AKHM
.3	Access Location	• Access shall be provided at the elevation of the embankment crest: ○ Along north and south sides of Flame & Moth Pond, including over the emergency spillway from the Mill Pond to the Flame & Moth Pond. • Along eastern/southeast side of Mill Pond.	AKHM
.4	Access Grade	• Max 12% grade • Grade transitions shall be traversable with the design vehicles.	AKHM
.5	Road Cross Slope	• Roads at or above the embankment crest: uniform cross slope towards the pond • Roads below embankment crest: uniform cross slope • Min 5%, max 8% cross slope	AKHM
.6	Road width	• 4 m on straightaways, 5 m at corners	AKHM
.7	Guarding	• Engineer shall confirm guarding requirements with site, but anticipate the following. • Space shall be provided to construct guardrails, jersey barriers, or berms along edges where there is danger of vehicle rollover. ○ Guardrails/Jersey barriers require 1 m width • Berms shall be at least as tall as mid-axel height of largest design vehicle— assume berm width is three times the height. • Fence around perimeter with opening to minimize personnel and animal interaction with water.	AKHM

3.3.3 Utilities Around Ponds

Design Basis Item		Design Basis	Reference / Source
.1	General	• Pipelines shall be maintained on the surface in their approximate current horizontal locations, unless otherwise stated herein or agreed to by AKHM. • Electrical lines shall be buried and run in conduit.	AKHM

Doc ID: c2785cc94a83cebef7dfe33a7142486261d3887b

3.4 Mill Pond Criteria

3.4.1 General

Design Basis Item		Design Basis	Reference / Source
.1	Design Life	• Permanent Structure	AKHM
.2	MDE	• Expected performance of the Mill Pond under the MDE load: no major collapse and/or no uncontrolled release of water. Damage to infrastructure and disruption to operations may occur, necessitating repairs. ○ Operations Return period: 2,475 years (2% probability of occurrence in 50 years). (EMR)	AKHM/EMR
.3	Pumphouse Positioning	• The pumphouse shall be shifted to the center of the western end of the pond to allow cleaner access to the north side of the pond	AKHM

Doc ID: c2785cc94a83cebef7dfe33a7142486261d3887b

3.4.2 Water Management

<table>
<tr><th colspan="2">Design Basis Item</th><th>Design Basis</th><th>Reference / Source</th></tr>
<tr><td>.1</td><td>Seepage Containment</td><td>• Seepage containment can be provided by a low permeability barrier appropriate for the location and potential exposure time, e.g., geomembrane liner system within pond basin, concrete in temporary flooded areas during large flood events.</td><td>AKHM</td></tr>
<tr><td>.2

.3</td><td>Normal Operating Water Level Range (LOWL and NOWL)</td><td>• Low Operating Water Level (LOWL): 1 m above sediment level
• Normal Operating Water Level (NOWL): 2 m above sediment level
• Values to be confirmed as part of design initiation.</td><td>AKHM (D. Colquhoun pers. comms Dec 14, 2024)</td></tr>
<tr><td>.4</td><td>EDF – Storage and Assumed WTP Operating Conditions</td><td>• Store the larger of the following NOWL and Operational Upset pond volume (see Item 3.4.2.6) without release of water through the spillway per EDF criteria defined in Section 3.1.5.
• Engineer shall coordinate with AKHM to confirm the discharge rates to the environment through the Water Treatment Plan (WTP) at different pond stages shown in the table below.
<table>
<tr><th>Stage Description</th><th>Discharge Rate (liters per second [lps])</th></tr>
<tr><td>Mill Pond water level < El. XXX m</td><td>0</td></tr>
<tr><td>Mill Pond water level > El. XXX m.</td><td>35</td></tr>
</table>
• The WTP shall be assumed to be in good working condition such that the treatment capacity is equivalent to when the WTP was first constructed, unless otherwise directed by AKHM.</td><td>AKHM</td></tr>
<tr><td>.5</td><td>Inflow to Mill Pond</td><td>• The following waters report to the Mill Pond. Flow rates to be confirmed with Site team.
<table>
<tr><th>Source</th><th>Flow Rate (lps)</th></tr>
<tr><td>Mill Process</td><td>XX</td></tr>
<tr><td>Site runoff</td><td>From hydrology model</td></tr>
</table></td><td>AKHM</td></tr>
<tr><td>.6</td><td>Operational Upset Allowance during EDF</td><td>• Six-hour interruption to the Mill WTP flow while operating at maximum capacity.</td><td>AKHM</td></tr>
<tr><td>.7</td><td>Inflow Design Flood</td><td>• Pass peak flows defined in Section 3.1.5 through the spillway while maintaining minimum freeboard levels per Item 3.3.1.3.
• As a base case, assume upstream diversions (i.e., on the east side of the DSTF) are functioning during the IDF. Sensitivity cases are to include a failure of the upstream diversions.</td><td>AKHM</td></tr>
<tr><td>.8</td><td>Spillway</td><td>• An emergency spillway shall be provided that can pass IDF flows (see Section 3.1.5) from the Mill Pond to the Flame and Moth Pond.</td><td>AKHM</td></tr>
</table>

Doc ID: c2785cc94a83cebef7dfe33a7142486261d3887b

3.4.3 Access

Design Basis Item		Design Basis	Reference / Source
.1	Purpose	• Allow vehicles to access sides of pond to remove sediment and maintain piping. • Able to accommodate: o 30-tonne articulated haul truck o Light vehicles o Tracked equipment (excavator) o Vac truck	AKHM
.2	General Pond Access	• Access shall be provided along entire length of the northern and southern sides of expanded pond at the elevation of the pond crest for cleaning and pipe maintenance.	AKHM

3.4.4 Sediment Management

Design Basis Item		Design Basis	Reference / Source
.1	Maximum Sediment Storage	• Assume 2 meter of sediment accumulation in the base of the Mill Pond. • Values to be confirmed at design initiation.	AKHM (D. Colquhoun pers. comms Dec 14, 2024)
.2	Sediment Bag Pad	• A concrete pad shall be provided in the general area of the existing dewatering area for placing dewatering bags. The pad size shall accommodate at least two bags. • The pad shall be constructed adjacent to the Mill Pond so runoff from the bags can flow directly into the pond. • The pad, and pad foundation, shall be capable of supporting the bags, and the design vehicles defined in Section 3.4.3. • The pad shall have a cross-slope towards the pond between 0.5% and 1% to allow water to drain but prevent sediment bags from rolling. The maximum grade may be increased if allowed by the sediment bag manufacturer.	AKHM
.3	Sediment Bag Containment Requirements	• A 0.3 m curb shall be constructed around the perimeter to prevent water from the bags from leaving containment. • The inside edge of the curb shall be sloped at 45°, the top of the curb shall be 0.15 m wide, and the back of the curb shall be constructed vertical. • The curb adjacent to the pond shall have 0.3-m wide breaks every 2 m to allow water to drain to the pond. • Fill on the outside of the curb shall be level with the top of the curb. • The pond liner shall be extended completely under the pad and be sloped towards the pond to capture any runoff through cracks that will develop in the pad.	AKHM

Doc ID: c2785cc94a83cebef7dfe33a7142486261d3887b

3.5 Flame & Moth Pond Criteria

3.5.1 General

Design Basis Item		Design Basis	Reference / Source
.1	Design Life	• Permanent Structure	AKHM
.2	MDE	• Expected performance of the Flame & Moth Pond under the MDE load: no major collapse and/or no uncontrolled release of water. Damage to infrastructure and disruption to operations may occur, necessitating repairs. ○ Operations Return period: 2,475 years (2% probability of occurrence in 50 years). (EMR)	AKHM/EMR
.3	Pumphouse Positioning	• The pumphouse shall be maintained in its current approximate horizontal location.	AKHM

Doc ID: c2785cc94a83cebef7dfe33a7142486261d3887b

3.5.2 Water Management

<table>
<tr><th colspan="2">Design Basis Item</th><th>Design Basis</th><th>Reference / Source</th></tr>
<tr><td>.1</td><td>Seepage Containment</td><td>• Seepage containment can be provided by a low permeability barrier appropriate for the location and potential exposure time, e.g., geomembrane liner system within pond basin, concrete in temporary flooded areas during large flood events.</td><td>AKHM</td></tr>
<tr><td>.2</td><td>Normal Operating Water Level Range (LOWL and NOWL)</td><td>• Engineer shall coordinate with AKHM to determine the Low Operating Water Level (LOWL) and the Target Normal Operating Water Level (NOWL) for the Flame & Moth Pond and shall incorporate into the design for the pond expansion</td><td>AKHM</td></tr>
<tr><td>.3</td><td>EDF – Storage and Assumed WTP Operating Conditions</td><td>• Store the larger of the following NOWL and Operational Upset pond volume (see Item 3.4.2.6) without release of water through the spillway per EDF criteria defined in Section 3.1.5.
• Engineer shall coordinate with AKHM to confirm the discharge rates to the environment through the Water Treatment Plan (WTP) at different pond stages shown in the table below.
<table>
<tr><th>Stage Description</th><th>Discharge Rate (liters per second [lps])</th></tr>
<tr><td>Flame & Moth Pond water level < El. XXX m</td><td>0</td></tr>
<tr><td>Flame & Moth Pond water level > El. XXX m.</td><td>35</td></tr>
</table>
• The WTP shall be assumed to be in good working condition such that the treatment capacity is equivalent to when the WTP was first constructed, unless otherwise directed by AKHM.</td><td>AKHM</td></tr>
<tr><td>.4</td><td>Inflow to Mill Pond</td><td>• The following waters report to the Flame & Moth Pond. Flow rates to be confirmed with Site team.
<table>
<tr><th>Source</th><th>Flow Rate (lps)</th></tr>
<tr><td>Mill Water Treatment Plant</td><td>XX</td></tr>
</table></td><td>AKHM</td></tr>
<tr><td>.5</td><td>Operational Upset Allowance during EDF</td><td>• Six-hour interruption to the discharge capacity while operating at maximum capacity.</td><td>AKHM</td></tr>
<tr><td>.6</td><td>Inflow Design Flood</td><td>• Pass peak flows defined in Section 3.1.5 through the spillway while maintaining minimum freeboard levels per Item 3.3.1.3.
• As a base case, assume upstream diversions (i.e., on the east side of the DSTF) are functioning during the IDF. Sensitivity cases are to include a failure of the upstream diversions.</td><td>AKHM</td></tr>
<tr><td>.7</td><td>Spillway</td><td>• An emergency spillway shall be provided that can pass IDF flows (see Section 3.1.5) to the environment.</td><td>AKHM</td></tr>
</table>

Doc ID: c2785cc94a83cebef7dfe33a7142486261d3887b

3.5.3 Access

Design Basis Item		Design Basis	Reference / Source

.1	Purpose	• Allow vehicles to maintain piping and other infrastructure
		• Able to accommodate:
		  ○ 30-tonne articulated haul truck
		  ○ Light vehicles
		  ○ Tracked equipment (excavator)
		  ○ Vac truck
			AKHM

.2	General Pond Access	• Access shall be provided along the entire northern and eastern/southern sides of the expanded pond at the elevation of the pond crest for cleaning and pipe maintenance.	AKHM

3.5.4 Sediment Management

Design Basis Item		Design Basis	Reference / Source
.1	Maximum Sediment Storage	• Assume 1 meter of sediment accumulation in the base of the Mill Pond. • Value to be confirmed during design initiation	AKHM
.2	Sediment Bag Pad	• A concrete pad shall be provided for placing dewatering bags. The pad size shall accommodate at least two bags. • The pad shall be constructed so runoff from the bags can flow directly into the pond. • The pad, and pad foundation, shall be capable of supporting the bags, and the design vehicles defined in Section 3.4.3. • The pad shall have a cross-slope towards the pond between 0.5% and 1% to allow water to drain but prevent sediment bags from rolling. The maximum grade may be increased if allowed by the sediment bag manufacturer.	AKHM
.3	Sediment Bag Containment Requirements	• A 0.3 m curb shall be constructed around the perimeter to prevent water from the bags from leaving containment. • The inside edge of the curb shall be sloped at 45°, the top of the curb shall be 0.15 m wide, and the back of the curb shall be constructed vertical. • Fill on the outside of the curb shall be level with the top of the curb. • Means shall be provided to allow water from the bags to be directed to the Flame & Moth Pond. • The pond liner shall be extended completely under the pad and be sloped towards the pond to capture any seepage through cracks that will develop in the pad.	AKHM

Doc ID: c2785cc94a83cebef7dfe33a7142486261d3887b

3.6 Reference Information

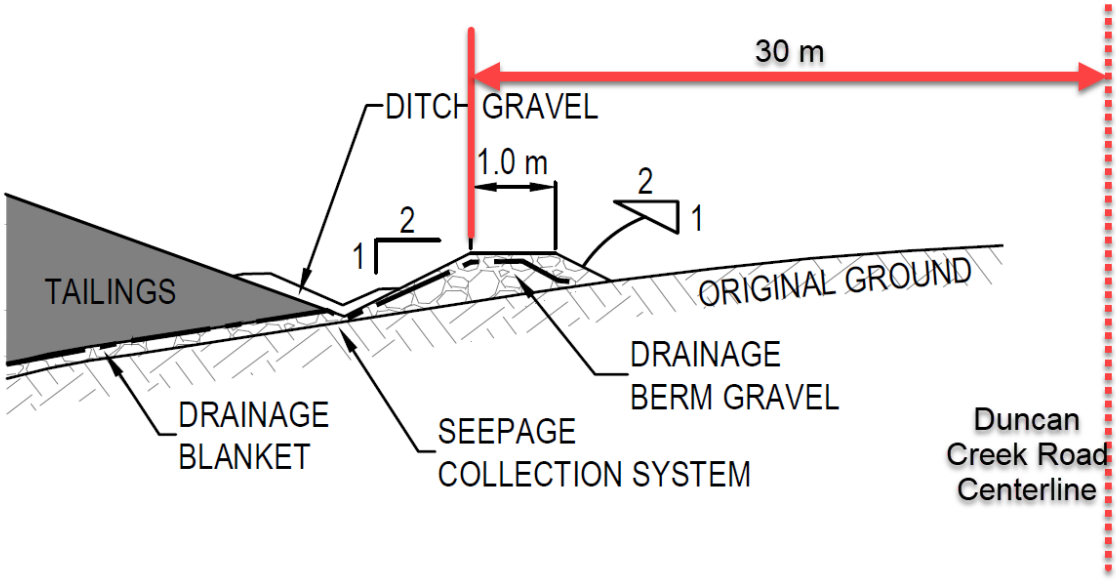

Figure 3-1: Right of Way Offset



Figure 3-2: Hydrology Assessment Approximate Catchment Limits

Doc ID: c2785cc94a83cebef7dfe33a7142486261d3887b

Appendix C – Inspection Forms

Doc ID: c2785cc94a83cebef7dfe33a7142486261d3887b

DSTF WEEKLY VISUAL INSPECTION CHECKLIST

Date/Time: _____ Weather: _____

Inspector: _____ Temperature: _____

Description of work occurring on site:

Area	Observation	Yes/No	
DSTF Surface	Apparent slope movement?	☐ Yes, photograph and describe:	☐ No
	Erosion or gullying?	☐ Yes, photograph and describe:	☐ No
	Water flowing down tailings stack?	☐ Yes, photograph and describe:	☐ No
	Toe or face bulging?	☐ Yes, photograph and describe:	☐ No
	Depressions, sinkholes, animal burrows or tension cracks?	☐ Yes, photograph and describe:	☐ No
Seepage	Seepage areas?	☐ Yes, photograph and describe:	☐ No
	Changes in seepage rate?	☐ Yes, photograph and describe:	☐ No
	Turbidity in seepage?	☐ Yes, photograph and describe:	☐ No
Runoff Collection Ditch	Erosion of ditch berm?	☐ Yes, photograph and describe:	☐ No
	Vegetation or obstructions in ditch?	☐ Yes, photograph and describe:	☐ No
	Turbid flow?	☐ Yes, photograph and describe:	☐ No
Surrounding Area	Tailings/turbid water visible at surface or in nearby watercourses?	☐ Yes, photograph and describe:	☐ No
	Visible boils?	☐ Yes, photograph and describe:	☐ No
Monitoring Instrumentation	Damage to, or deterioration of instrumentation?	☐ Yes, photograph and describe:	☐ No

Other Comments:

Appendix D – Trigger Action and Response Plan

Doc ID: c2785cc94a83cebef7dfe33a7142486261d3887b

Appendix D – DSTF Trigger Action Response Plan

Trigger Type	Alert Level[1]	Indicator	Trigger	Communication	Actions
Surface Water Erosion Surface water erosion occurs when water that runs along the surface of the DSTF degrades and mobilizes tailings that make up the DSTF stack. The resulting degradation could affect the stability of the DSTF.	Yellow	Visual Inspection	▪ Excessive pooling of water in flat areas and localized low points on the surface of the DSTF. ▪ Increased, uncontrolled or excessive water runoff on the surface of the DSTF. ▪ Formation of erosion runnel/gully, less than 50 mm deep.	▪ Notify Site Services Superintendent, and Sr. Geotechnical Engineer	▪ Repair affected areas by regrading. Fill hollows and localized low points by placing material. ▪ Promote drainage away from affected slopes.
	Orange	Visual Inspection	▪ Formation of erosion runnel/gully, 50 mm to 500 mm deep.	▪ Notify Operations Manager, TMT and EoR	▪ Repair affected areas by regrading. Fill hollows and localized low points by placing material. ▪ Promote drainage away from affected slopes.
	Red	Visual Inspection	▪ Further signs of instability (deformation, cracking, tilting, bulging) due to surface water erosion. ▪ Formation of erosion runnel/gully, greater than 500 mm deep.	▪ Notify TMT and EoR,	▪ EoR to conduct site inspection and advise if affected areas should be evacuated and/or DSTF access restricted. ▪ Evaluate cause of instability and assess mitigation options.
Slope Instability Events that may lead to slope instability include an earthquake, heavy precipitation, excessive water infiltration and rapid snow accumulation and melting.	Yellow	Visual Inspection	▪ New isolated short hairline cracks (less than 10 mm wide). ▪ Animal burrows.	▪ Notify Site Services Superintendent, Sr. Geotechnical Engineer, and EoR	▪ Repair affected areas by regrading.
	Yellow	Slope Indicator Data	▪ Evaluation of slope indicator data indicates new, or accelerating movement, sustained creep, or total movement of 20 mm or more.	▪ Notify TMT and EoR	▪ Inspect nearby facility components for surficial signs of instability. ▪ Collect supplementary slope indicator reading from affected instrument. ▪ EoR to evaluate movement trends to assess whether additional investigation, increased monitoring frequency, and/or mitigation is required.
	Yellow	Survey Data	▪ Evaluation of survey monitoring data indicates new movement (less than 15 mm/day), accelerating movement, or sustained creep.	▪ Notify TMT and EoR	▪ Inspect nearby facility components for surficial signs of instability. ▪ Complete supplementary survey to confirm results. ▪ EoR to evaluate movement trends to assess whether additional investigation, increased monitoring frequency, and/or mitigation is required.
	Yellow	Piezometer Data	▪ Piezometers detect saturated conditions within the DSTF foundation or at the base of the tailings, or a noticeable change in piezometric pressures from previous readings.	▪ Notify EoR	▪ Inspect tailings stack and perimeter for abnormal ponding or seepage. ▪ EoR to evaluate impact of saturated conditions on DSTF stability and assess whether additional investigation or mitigation is required.
	Orange	Visual Inspection	▪ Persistent, minor cracking of the evapo-transpirative cover. ▪ New cracks, 10 mm to 20 mm wide. ▪ Minor crest deformation or settlement. ▪ Minor face bulging or toe spreading. ▪ New sinkhole.	▪ Notify TMT and EoR	▪ Increase visual inspection monitoring of affected area to daily or as directed by the EoR. ▪ Evaluate cause of possible instability and assess mitigation options.
	Orange	Survey Data	▪ Evaluation of survey monitoring data indicates movement between 15 mm/day to 25 mm/day.	▪ Notify TMT and EoR	▪ Increase visual inspection monitoring of affected area to daily or as directed by the EoR. ▪ Evaluate cause of possible instability and assess mitigation options.
	Red	Visual Inspection	▪ Excessive or abnormal cracking. ▪ Excessive crest deformation or settlement. ▪ Excessive over-steepening of crest. ▪ Seepage breakout on face of DSTF. ▪ Excessive face bulging or toe spreading.	▪ Notify TMT and EoR ▪ Activate ERP as required	▪ Activate ERP. ▪ Restrict access to affected areas. ▪ EoR to conduct site inspection. ▪ Evaluate cause of instability and assess mitigation options.
	Red	Slope Indicator Data	▪ Evaluation of slope indicator movement indicates potential for imminent, large, shallow failure or deep-seated instability.	▪ Notify TMT and EoR ▪ Activate ERP as required	▪ Activate ERP. ▪ Restrict access to affected areas. ▪ EoR to conduct site inspection. ▪ Evaluate cause of instability and assess mitigation options.
	Red	Survey Data	▪ Evaluation of survey monitoring data movement indicates potential for imminent, large, shallow failure or deep-seated instability. ▪ Evaluation of survey monitoring data indicates movement greater than 25 mm/day.	▪ Notify TMT and EoR ▪ Activate ERP as required	▪ Activate ERP. ▪ Restrict access to affected areas. ▪ EoR to conduct site inspection. ▪ Evaluate cause of instability and assess mitigation options.

Trigger Type	Alert Level[(1)]	Indicator	Trigger	Communication	Actions
Seepage Changes in seepage rate or turbidity, or presence of sediment washout can indicate internal erosion of the tailings stack.	Yellow	Visual Inspection	▪ Visible clear seepage from DSTF within containment.	▪ Notify Site Services Superintendent and EoR	▪ Evaluate cause of seepage and assess mitigation options.
	Orange	Visual Inspection	▪ Sediment washout at the toe of the DSTF. ▪ Visible turbid seepage.	▪ Notify TMT and EoR	▪ EoR to travel to site to evaluate possible internal erosion potential and mitigation options.
	Red	Visual Inspection	▪ Further signs of DSTF instability (deformation, cracking, tilting, bulging) due to seepage erosion, or seepage outside DSTF footprint.	▪ Notify TMT and EoR ▪ Activate ERP as required	▪ Activate ERP. ▪ Restrict access to affected areas. ▪ EoR to conduct site inspection. ▪ Evaluate cause of seepage and assess mitigation options.
Permafrost Degradation Gradual permafrost degradation is normal for the DSTF, but rapid degradation can lead to slope instability.	Yellow	GTC Data	▪ Ground temperature data indicates newly thawed or thawing conditions below original ground level.	▪ Notify EoR	▪ EoR to evaluate ground temperature data and classify Orange Alert if necessary.
	Orange	GTC Data	▪ Ground temperature data indicates rapid permafrost degradation and potential for slope instability, based on review by EoR.	▪ Notify TMT and EoR	▪ Complete visual inspection to assess surface indications of thaw-induced instability. ▪ Mitigate permafrost degradation or its effects as directed by the EoR.
	Orange	Visual Inspection	▪ Observations consistent with permafrost thaw such as sinkholes or depressions at toe or in DSTF surrounding area.	▪ Notify TMT and EoR	▪ Complete visual inspection to assess surface indications of thaw-induced instability. ▪ Wait for EoR response before repairing sinkholes or depressions unless site safety requires immediate repair. ▪ Mitigate permafrost degradation or its effects as directed by the EoR.
Surface Water Flow Streams and surface water near the DSTF can affect, and be affected by, DSTF operations. This can include water contamination or erosion of DSTF components.	Orange	Visual Inspection	▪ Tailings or abnormally turbid water observed immediately downstream of DSTF.	▪ Notify Operations Manager, TMT, and EoR	▪ Investigate source of tailings or turbidity and mitigate as directed by EoR.
Instrumentation Damage Geotechnical instrumentation may need repair or replacement if damaged.	Yellow	Visual Inspection / Instrumentation Data	▪ Damage to geotechnical instrumentation observed. ▪ Instrumentation data incomplete or questionable.	▪ Notify Operations Manager and EoR	▪ Repair or replace instrumentation as directed by EoR.
Diversion Structure Blockage Blockages in diversion structures may impede surface water flow or reduce diversion structure capacity.	Yellow	Visual Inspection	▪ Obstruction in diversion berms or ditches, including snow, ice, sediment, rocks, sticks, or other debris	▪ Notify Site Services Superintendent	▪ Clear blockage. ▪ Assess whether blockage is associated with other unusual conditions (e.g., increased erosion and deposition).
Significant Natural Event Natural events including earthquakes and heavy rainfall can result in damage to the DSTF and slope instability.	Yellow	Earthquakes Canada Bulletin / Observation	▪ Seismic event with a magnitude greater than 5 occurring within 150 km of the DSTF. ▪ Earthquake felt on site.	▪ Notify TMT and EoR	▪ Complete facility inspection. ▪ Collect SI, VWP, and survey monument instrumentation readings.
	Yellow	Weather Station (Mayo Airport)	▪ Precipitation event with more than 50 mm of rainfall recorded in 24 hr period.	▪ Notify TMT and EoR	▪ Complete facility inspection. ▪ Collect VWP instrumentation readings.

NOTES:

(1) Alert levels are defined as:

- Yellow: minor risk situation or unusual condition requiring review.
- Orange: moderate risk situation or potential emergency condition requiring urgent review.
- Red: high risk situation, potential imminent failure, or failure of facility requiring urgent review and response to protect human safety and/or environment.

Doc ID: c2785cc94a83cebef7dfe33a7142486261d3887b

Appendix E – DSTF Phase 2 Instrumentation and Monitoring Plan (Tetra Tech 2024a)

Doc ID: c2785cc94a83cebef7dfe33a7142486261d3887b

TETRA TECH

TECHNICAL MEMO

ISSUED FOR USE

To:	Aaron Marsh, P.E. - Tailings Manager	**Date:**	August 22, 2024
From:	Ian MacIntyre, P.Eng. Gary Koop, P.Eng.	**Memo No.:**	2024-P2E-IMP
		File:	704-ENG.WARC04415-10
Subject:	Instrumentation and Monitoring Plan – DSTF Phase 2 East Keno Hill Mine, YT		

1.0 INTRODUCTION

This document presents the Instrumentation and Monitoring plan (IMP) for the Phase 2 East Dry Stacked Tailings Facility (DSTF P2E) at the Keno Hill Silver District Mining Operations (Keno Hill) near Keno City, Yukon. Keno Hill is an underground silver, lead, and zinc mine operated by Alexco Keno Hill Mining Corporation (AKHM), owned by Hecla Mining Company (Hecla). The site is operated under Quartz Mining License No. QML-0009.

Filtered tailings are presently being stored in the Phase 1 DSTF. Tailings are hauled from the mill to the DSTF where they are spread and compacted. The Phase 2 DSTF is located southeast of the P1 facility and comprises a lined containment facility, associated buttressing as required for stability, and is surrounded by perimeter ditching which ultimate directs contact water to the Mill Pond for water treatment. Details related to the P2 DSTF are available in the design report (revision in progress).

AKHM is planning to phase construction of the Phase 2 DSTF: the eastern portion of the Phase 2 DSTF (DSTF P2E) will be constructed in late summer/early fall 2024; the western portion (DSTF P2W) in 2025.

This IMP outlines planned instrumentation for the DSTF P2E to monitor the facility for potential failure modes as described in the Failure Modes and Effects Analysis (revision in progress). The IMP is designed for mine operations. Additional instrumentation planning will be required as part of closure.

Design updates to the P2E DSTF are presently in progress. The IMP will be updated as required to reflect design updates, and site observations during construction.

2.0 OBJECTIVES

The DSTF P2E instrumentation and monitoring plan is intended to:

- Confirm safe operating conditions and performance, consistent with design expectations;
- Provide advanced warning of developing instabilities and information related to instability mechanisms;
- Quantify displacement, rates, and other trends in collected data;
- Establish and maintain a record of facility performance; and
- Provide monitoring of mechanisms associated with failures modes addressed in the FMEA.

Tetra Tech Canada Inc.
61 Wasson Place
Whitehorse, YT Y1A 0H7 CANADA
Tel 867.668.3068 Fax 867.668.4349

Doc ID: c2785cc94a83cebef7dfe33a7142486261d3887b

A Failure Modes and Effects Analysis workshop was completed on July 3, 2024. This workshop was attended by Tetra Tech, Hecla, and members of Hecla's Independent Tailings Review Board (ITRB). The goal of the workshop was to evaluate design and performance risks to further guide instrumentation requirements and improve design and operational compenents.

Potential failure modes (PFMs) were identified and categorized according to Hecla's consequence and likelihood definitions, and subsequently their Risk Classes identified using the risk matrix included in the FMEA report (under revision). PFMs were evaluated with 'no controls' in place and with 'operation or engineering controls' to manage risk. Table 2-1 summarizes the preliminary moderate, high or critical risks identified in the FMEA. It should be noted, that apart from PFM 10 (Differential Settlement) and PFM 017 (dust release), PFM risk dropped substantially with operational and engineering controls.

Instrumentation is recommended to monitor facility performance and confirm controls are functioning as intended. Generally, the instrumentation consists of:

- Ground temperature cables to monitor changes in foundation soil temperatures, indicative of changes in ground ice and permafrost conditions, which may predict ongoing or future deformation.
- Slope inclinometers to monitor trends in ground movement within the facility foundation and the P2E toe buttress.
- Survey monuments to monitor trends in surficial movement along the facility buttress and final tailings surface.
- Vibrating wire piezometers to monitor trends or changes in porewater pressures within the facility foundation (i.e., below the liner system) and within the base of the tailings (i.e., above the liner system).

In some cases instrumentation is proposed to directly monitor a specific PFM; in other, it provides operational data that used as part of subsequent design. PFM specific isntrumentation is indicated in Table 2-1.

The monitoring recommendations discussed herein are to be referenced in conjunction with the DSTF Phase 2 Design and Construction Drawings (revision in progress) and incorporated into the next update of the DSTF Operations, Maintenance, and Surveillance (OMS) manual. Quantifiable performance objectives (QPO) and trigger and response plans (TARP) related to instrumentation will be included in the OMS manual.

Facility performance will also be monitored during operation using physical inspections and in situ testing methods also documented in the OMS manual.

Doc ID: c2785cc94a83cebef7dfe33a7142486261d3887b

Table 2-1: Moderate and High Risk PFMs for Phase 2 East DSTF

PFM ID	PFM Description	Risk Class[1] (No Control)	Risk Class[1] (With Control)	Controls	Instrumentation
PFM-001	Global slope instability - deep seated static failure through foundation	Moderate	Low	▪ Engineering design to meet target factors of safety for stability (1.5 for static conditions, greater than 1.0 for post-seismic) ▪ Stability assessment based on conservative parameters – Consideration of frozen and unfrozen ground conditions – Reduced shear strength for placed tailings ▪ Conservative assumption for original ground friction angle	▪ Slope Inclinometers ▪ Survey Monuments ▪ Virbrating Wire Piezometers
PFM-002	Global slope instability - deep seated static failure through tailings	High	Low	▪ Engineering design to meet target factors of safety for stability (1.5 for static conditions, greater than 1.0 for post-seismic) ▪ Stability assessment based on conservative parameters – Consideration of frozen and unfrozen ground conditions – Reduced shear strength for placed tailings – Conservative assumption for original ground friction angle ▪ Implementing standard procedure for placement and compaction based on completed field trials ▪ Monitoring tailings placement and facility performance per OMS forsigns of movement or distress	▪ Survey monuments at areas of concern
PFM-003	Global slope instability - deep seated static failure through liner interface	High	Low	▪ Engineering design to meet target factors of safety for stability (1.5 for static conditions, greater than 1.0 for post-seismic) ▪ Stability assessment based on conservative parameters – Residual shear strength at liner interface – Reduced shear strength for placed tailings	▪ Slope Inclinometers ▪ Survey Monuments ▪ Virbrating Wire Piezometers
PFM-004	Tailings liquefaction during seismic event	Moderate	Low	▪ Design targets minimum densities to reduce risk of liquefaction ▪ Advanced laboratory testing being completed to evaluate credibility of PFM ▪ Quality control during construction and operation to ensure compliance with design ▪ CPT Investigation program to measure behaviour of Phase 1 tailings	▪ No proposed instrumentation
PFM-007	Static liquefaction of tailings	High	Moderate	▪ Design targets minimum densities to reduce risk of liquefaction ▪ Advanced laboratory testing being completed to evaluate credibility of PFM ▪ Quality control during construction and operation to ensure compliance with design ▪ CPT Investigation program to monitor in situ density	▪ No proposed instrumentation
PFM-009	Crest / side-slope erosion (i.e., vehicle traffic, heavy equipment, lack of compaction, general precipitation erosion on side-slopes)	Moderate	Low	▪ Quality control during construction and operation to ensure compliance with design ▪ Visual assessment during construction and operation and following large storm events	▪ No proposed instrumentation
PFM-010	Large differential settlement or deformation due to permafrost thaw, leading to surface tailings exposure and/or breach of seepage collection system	Moderate	Moderate	▪ Potential for differential movement accounted for in design	▪ Ground Temperature Cables
PFM-011	Geochemical compatibility of tailings and seepage collection system	High	Low	▪ Change management process to ensure changes in mill processes do not introduce chemicals into the tailings that are incompatible with the liner.	▪ No proposed instrumentation
PFM-012	Compromised physical performance of seepage collection system (puncture, lack of overlap, etc.)	High	Low	▪ Drainage blanket designed with maximum particle size to reduce potential for liner damage. A non-woven geotextile has been implemented as a cushion layer between the drainage blanket layer and the GCL. ▪ Placement of liner system and drainage blanket will be monitored by Construction Monitor to verify compliance with specifications. Proper QAQC during construction to verify adequate bearing surface with no protrusions prior to liner installation. ▪ Groundwater monitoring systems installed in foundation and in above- and below-liner drains	▪ No proposed geotechnical instrumentation
PFM-017	Release of dust from facility impacting off-site air quality, soils, or water	High	High	▪ Dust monitoring will occur as per the Dust Abatement and Monitoring Plan	▪ No proposed geotechnical instrumentation
PFM-018	Operational safety due to poor construction (e.g. vehicle roll over). This impacts AKHM's reputation and could possibly delay material placement for investigations or clean up	Hgih	Low	▪ Monioring during material placement to veryfiy compliance with diesign ▪ Development of operational procedures to safe guard against accidents (ie. Minimum set backs from crest, hazard assessment)	▪ No proposed instrumentation

[1]Risk class based on current FMEA (under revision). IMP will be updated as required

Doc ID: c2785cc94a83cebef7dfe33a7142486261d3887b

3.0 INSTRUMENTATION SUMMARY

3.1 Ground Temperature Cables

3.1.1 General

The DSTF P2 facility is underlain by discontinuous warm permafrost, typically above -0.4°C. Localized zones of ice-rich material are known to exist, particularly in the northwest corner of Phase 2 DSTF. Thermal modelling, supported by observations of foundation ground temperatures in the Phase 1 DSTF indicates that this permafrost will thaw over the coming decades. Thawing permafrost, particularly ice-rich permafrost may lead to settlement, development of increased pore water pressure, and ponding of water.

Ground temperature monitoring will be completed within the DSTF P2 footprint. This will provide baseline data for ground conditions and provide monitoring data in support of PFM-10 (Differential settlement due to permafrost thaw)

3.1.2 Instrumentation Plan

GTCs typically consist of temperature sensor (thermistor) beads installed at multiple positions along a single cable. Measurement accuracy is typically about 0.1°C.

Seven ground temperature cables (GTCs; see Table 3-1) have been installed within the DSTF P2 footprint as part of previous investigations. These GTCs will be maintained and incorporated into the monitoring plan for DSTF P2E.

Table 3-1: Ground Temperature Cable Information Within the DSTF P2 Footprint

Borehole Number	GTC Cable Type & No.	No. of Beads	Original Ground Elevation (m)	Bottom of Borehole Elevation (m)
BH22-01	Tetra Tech #2819	16	917	902.5
BH22-05	Tetra Tech #2820	16	931.7	904.9
BH22-06	Tetra Tech #2821	16	933	902.5
BH22-07	Tetra Tech #2822	16	924.4	909.9
BH22-08	Beaded Stream #4473	36	926.5	903.6
BH22-09	Tetra Tech #2823	16	924.1	895.8
BH22-10	Beaded Stream #4474	25	918.6	896

The existing GTCs in the P2E footprint will be protected during construction and their leads extended to central locations outside of the footprint, as shown in the construction drawings (revision in progress). The leads should extend nominally horizontally to a central location outiside the DSTF tailings footprint where they will be connected to data loggers removing the need for manual readings. The as-built location of the cables should be surveyed during installation.

3.2 Slope Inclinometers

3.2.1 General

Key PFMs (PFM-001 to PFM-003) identified during the FMEA process included mechanisms of movement, either in the foundation soils, at the liner system interface, or within the tailings.

Slope inclinometers (SI's) are commonly used to measure distributed creep deformations and shear movement along discreet discontinuities or zones of deformation within a structure and/or its underlying foundation. SI's consist of end-capped, grooved casing installed within a borehole to a target depth, ideally into a stable layer.

A probe is lowered into the casing within these grooves and readings collected at specified increments. Once baseline measurements are collected, subsequent measurements/surveys are completed at regular frequencies and/or after specified events such as earthquakes. Sensors measure probe tilt at the various depths, and movement relative to the baseline measurements can be determined.

3.2.2 Instrumentation Plan

An SI will be installed to monitor for potential creep or shear movement in the foundation soils and P2E buttress. The SI will be installed towards the north end of the P2E buttress, where the buttress height is greatest and ice-rich ground conditions are known to exist.The SI will be installed near the downstream crest of the buttress, and advanced into bedrock.

Tailings placement within the DSTF P2E footprint will be completed in lifts over several months or years. SI installation within the tailings would require tailings to be placed around the instrumentation and the instrumentation to be extended during operations. This is not considered practical as there is a high risk of instrumentation damage during tailings placement. SI installation within the tailings can be considered as part of closure once tailings placement within the P2E area is complete; however, it is not included as part of this instrumentation plan.

During final construction of Phase 2 (i.e., Phase 2 West), the SIs will be extended vertically to the final closure surface. Inclinometers will need to be read pre and post raise to re-baseline the readings..

3.3 Survey Monuments

Survey monuments will be installed in select locations of the P2E buttress and tailings slope and crest as designated in the Construction Drawings. Monuments will consist of either metal pins driven into the substrate (for short-term monitoring); or pins connected to a base plate buried at depth (for longer-term instalations).

Monuments should be surveyed using concentional survey methods. Movement observed may be indicative of shallow or surficial movement, or potentially related to other deep-seated movement and correlated with other instrumentation.

3.4 Vibrating Wire Piezometers

3.4.1 General

Increased porewater pressure and/or the presence of a phreatic surface at the base of the tailings (i.e., above the GCL) may indicate conditions where drains are not functioning properly, and reduce the effective strengths of the foundation materials.

Rapid thawing of permafrost in the near-surface native soils (i.e., below the GCL) may lead to an increase in porewater pressure, hydraulic gradients and/or the presence of a phreatic surface in the foundation soils and drainage blanket material underneath the DSTF and liner system.

Development of a phreatic surface at the base of the tailings or near native ground surface is not anticipated based on the DSTF design. However, porewater pressures should be monitored to assess DSTF performance against design expectations. If a phreatic surface were to develop, it would be expected to be observed perched at the topographic low-point of the prepared native ground surface and installed GCL, near the designed drainage structures.

Vibrating wire piezometers (VWPs) sense porewater pressure indirectly by measuring the resonant frequency of a vibrating steel wire attached to a flexible diaphragm. Changes in porewater pressure change the resonant frequency of the wire by moving the diaphragm. The resonant frequency is also affected by changes in temperature and atmospheric pressure; embedded thermistors (for temperature) and weather station data (for atmospheric pressure) are used to correct for these parameters in post-processing. Piezometric elevation (i.e., groundwater elevation) can be calculated for VWPs installed at a known elevation.

VWPs may be measured using a readout box which commonly displays vibration frequency in “B-units” ($Hz^2 * 10^{-3}$) and temperature. They can also be connected to dataloggers to automatically record readings at specified intervals.

3.4.2 Instrumentation Plan

Two VWPs will be installed near the base of the DSTF at the topographic low-point of the prepared native ground surface (to be determined by as-built survey during construction). One VWP should be positioned within the drainage blanket (i.e., slightly above native ground surface) and one VWP should be installed in the liner cover material (i.e., slightly above the GCL).

VWP sensors should be “heavy duty” models suitable for burial in granular soil. Prior to installation, VWP sensors should be prepared in accordance with manufacturer guidelines (e.g., filter saturation and collection of initial readings).

The VWP sensors should be installed per details in the design drawings (revisions in progress) The coordinates and elevations of the VWP sensors should be surveyed during installation.

VWP cables should be buried and installed in appropriate bedding material or within a protective conduit to protect from equipment damage, and should extend nominally horizontally to a central location outside of the DSTF tailings footprint where they will be connected to a data logger. The as-built location of the cables should be surveyed during installation.

4.0 MONITORING FREQUENCY AND REPORTING

Table 4-1 below summarizes the minimum monitoring requirements and frequencies for the instrumentation discussed above. These monitoring requirements are to be incorporated into the next revision of the OMS manual.

Table 4-1 – Instrumentation Minimum Reading Frequencies

Instrumentation	Minium Reading Frequency
Ground Temperature Cables	Monthly
Slope Inclinometers	Monthly for first 12 months after installation, then quarterly
Survey Monuments	Monthly
Vibrating Wire Piezometers	Monthly

Instrumentation readings should be collected by AKHM per the minimum frequencies noted above and provided to Tetra Tech within one week. At a minimum, quarterly readings will be collected by Tetra Tech for quality assurance purposes.

In addition to the above, event-driven readings may be required such as during spring freshet, after a seismic event, or if a change in physical conditions is observed. Updated event-driven reading requirements will be summarized in the next update of the DSTF OMS manual.

Thresholds and a trigger action response plan (TARP) are essential for safe operation and facility performance. The current TARP for the DSTF is defined in the OMS manual, and will be updated to incorporate the P2E instrumentation.

5.0 LIMITATIONS OF REPORT

This report and its contents are intended for the sole use of Alexco Keno Hill Mining Corporation and their agents. Tetra Tech Canada Inc. (Tetra Tech) does not accept any responsibility for the accuracy of any of the data, the analysis, or the recommendations contained or referenced in the report when the report is used or relied upon by any Party other than Alexco Keno Hill Mining Corporation, or for any Project other than the proposed development at the subject site. Any such unauthorized use of this report is at the sole risk of the user. Use of this document is subject to the Limitations on the Use of this Document attached in the Appendix or Contractual Terms and Conditions executed by both parties.

6.0 CLOSURE

We trust this technical memo meets your present requirements. If you have any questions or comments, please contact the undersigned.

Respectfully submitted,
Tetra Tech Canada Inc.

704-ENG.WARC04415-10

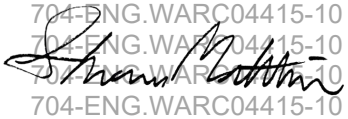

Prepared by:
Shawn Matthies, P.Eng.
Geotechnical Engineer, Arctic Group
Direct Line: 867.668.9238
Shawn.Matthies@tetratech.com

704-ENG.WARC04415-10

Prepared by:
Ian MacIntyre, P.Eng.
Geotechnical Engineer – Team Lead, Arctic Group
Direct Line: 867.668.9240
Ian.MacIntyre@tetratech.com

704-ENG.WARC04415-10

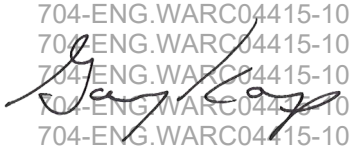

Reviewed by:
Gary Koop, P.Eng.
Principal Consultant
Direct Line: 587.460.3542
Gary.Koop@tetratech.com

/db

Enclosure: Limitations on the Use of this Document

Doc ID: c2785cc94a83cebef7dfe33a7142486261d3887b

LIMITATIONS ON USE OF THIS DOCUMENT

GEOTECHNICAL

1.1 USE OF DOCUMENT AND OWNERSHIP

This document pertains to a specific site, a specific development, and a specific scope of work. The document may include plans, drawings, profiles and other supporting documents that collectively constitute the document (the "Professional Document").

The Professional Document is intended for the sole use of TETRA TECH's Client (the "Client") as specifically identified in the TETRA TECH Services Agreement or other Contractual Agreement entered into with the Client (either of which is termed the "Contract" herein). TETRA TECH does not accept any responsibility for the accuracy of any of the data, analyses, recommendations or other contents of the Professional Document when it is used or relied upon by any party other than the Client, unless authorized in writing by TETRA TECH.

Any unauthorized use of the Professional Document is at the sole risk of the user. TETRA TECH accepts no responsibility whatsoever for any loss or damage where such loss or damage is alleged to be or, is in fact, caused by the unauthorized use of the Professional Document.

Where TETRA TECH has expressly authorized the use of the Professional Document by a third party (an "Authorized Party"), consideration for such authorization is the Authorized Party's acceptance of these Limitations on Use of this Document as well as any limitations on liability contained in the Contract with the Client (all of which is collectively termed the "Limitations on Liability"). The Authorized Party should carefully review both these Limitations on Use of this Document and the Contract prior to making any use of the Professional Document. Any use made of the Professional Document by an Authorized Party constitutes the Authorized Party's express acceptance of, and agreement to, the Limitations on Liability.

The Professional Document and any other form or type of data or documents generated by TETRA TECH during the performance of the work are TETRA TECH's professional work product and shall remain the copyright property of TETRA TECH.

The Professional Document is subject to copyright and shall not be reproduced either wholly or in part without the prior, written permission of TETRA TECH. Additional copies of the Document, if required, may be obtained upon request.

1.2 ALTERNATIVE DOCUMENT FORMAT

Where TETRA TECH submits electronic file and/or hard copy versions of the Professional Document or any drawings or other project-related documents and deliverables (collectively termed TETRA TECH's "Instruments of Professional Service"), only the signed and/or sealed versions shall be considered final. The original signed and/or sealed electronic file and/or hard copy version archived by TETRA TECH shall be deemed to be the original. TETRA TECH will archive a protected digital copy of the original signed and/or sealed version for a period of 10 years.

Both electronic file and/or hard copy versions of TETRA TECH's Instruments of Professional Service shall not, under any circumstances, be altered by any party except TETRA TECH. TETRA TECH's Instruments of Professional Service will be used only and exactly as submitted by TETRA TECH.

Electronic files submitted by TETRA TECH have been prepared and submitted using specific software and hardware systems. TETRA TECH makes no representation about the compatibility of these files with the Client's current or future software and hardware systems.

1.3 STANDARD OF CARE

Services performed by TETRA TECH for the Professional Document have been conducted in accordance with the Contract, in a manner consistent with the level of skill ordinarily exercised by members of the profession currently practicing under similar conditions in the jurisdiction in which the services are provided. Professional judgment has been applied in developing the conclusions and/or recommendations provided in this Professional Document. No warranty or guarantee, express or implied, is made concerning the test results, comments, recommendations, or any other portion of the Professional Document.

If any error or omission is detected by the Client or an Authorized Party, the error or omission must be immediately brought to the attention of TETRA TECH.

1.4 DISCLOSURE OF INFORMATION BY CLIENT

The Client acknowledges that it has fully cooperated with TETRA TECH with respect to the provision of all available information on the past, present, and proposed conditions on the site, including historical information respecting the use of the site. The Client further acknowledges that in order for TETRA TECH to properly provide the services contracted for in the Contract, TETRA TECH has relied upon the Client with respect to both the full disclosure and accuracy of any such information.

1.5 INFORMATION PROVIDED TO TETRA TECH BY OTHERS

During the performance of the work and the preparation of this Professional Document, TETRA TECH may have relied on information provided by third parties other than the Client.

While TETRA TECH endeavours to verify the accuracy of such information, TETRA TECH accepts no responsibility for the accuracy or the reliability of such information even where inaccurate or unreliable information impacts any recommendations, design or other deliverables and causes the Client or an Authorized Party loss or damage.

1.6 GENERAL LIMITATIONS OF DOCUMENT

This Professional Document is based solely on the conditions presented and the data available to TETRA TECH at the time the data were collected in the field or gathered from available databases.

The Client, and any Authorized Party, acknowledges that the Professional Document is based on limited data and that the conclusions, opinions, and recommendations contained in the Professional Document are the result of the application of professional judgment to such limited data.

The Professional Document is not applicable to any other sites, nor should it be relied upon for types of development other than those to which it refers. Any variation from the site conditions present, or variation in assumed conditions which might form the basis of design or recommendations as outlined in this document, at or on the development proposed as of the date of the Professional Document requires a supplementary exploration, investigation, and assessment.

TETRA TECH is neither qualified to, nor is it making, any recommendations with respect to the purchase, sale, investment or development of the property, the decisions on which are the sole responsibility of the Client.

TETRA TECH

Doc ID: c2785cc94a83cebef7dfe33a7142486261d3887b

1.7 ENVIRONMENTAL AND REGULATORY ISSUES

Unless stipulated in the report, TETRA TECH has not been retained to explore, address or consider and has not explored, addressed or considered any environmental or regulatory issues associated with development on the subject site.

1.8 NATURE AND EXACTNESS OF SOIL AND ROCK DESCRIPTIONS

Classification and identification of soils and rocks are based upon commonly accepted systems, methods and standards employed in professional geotechnical practice. This report contains descriptions of the systems and methods used. Where deviations from the system or method prevail, they are specifically mentioned.

Classification and identification of geological units are judgmental in nature as to both type and condition. TETRA TECH does not warrant conditions represented herein as exact, but infers accuracy only to the extent that is common in practice.

Where subsurface conditions encountered during development are different from those described in this report, qualified geotechnical personnel should revisit the site and review recommendations in light of the actual conditions encountered.

1.9 LOGS OF TESTHOLES

The testhole logs are a compilation of conditions and classification of soils and rocks as obtained from field observations and laboratory testing of selected samples. Soil and rock zones have been interpreted. Change from one geological zone to the other, indicated on the logs as a distinct line, can be, in fact, transitional. The extent of transition is interpretive. Any circumstance which requires precise definition of soil or rock zone transition elevations may require further investigation and review.

1.10 STRATIGRAPHIC AND GEOLOGICAL INFORMATION

The stratigraphic and geological information indicated on drawings contained in this report are inferred from logs of test holes and/or soil/rock exposures. Stratigraphy is known only at the locations of the test hole or exposure. Actual geology and stratigraphy between test holes and/or exposures may vary from that shown on these drawings. Natural variations in geological conditions are inherent and are a function of the historical environment. TETRA TECH does not represent the conditions illustrated as exact but recognizes that variations will exist. Where knowledge of more precise locations of geological units is necessary, additional exploration and review may be necessary.

1.11 PROTECTION OF EXPOSED GROUND

Excavation and construction operations expose geological materials to climatic elements (freeze/thaw, wet/dry) and/or mechanical disturbance which can cause severe deterioration. Unless otherwise specifically indicated in this report, the walls and floors of excavations must be protected from the elements, particularly moisture, desiccation, frost action and construction traffic.

1.12 SUPPORT OF ADJACENT GROUND AND STRUCTURES

Unless otherwise specifically advised, support of ground and structures adjacent to the anticipated construction and preservation of adjacent ground and structures from the adverse impact of construction activity is required.

1.13 INFLUENCE OF CONSTRUCTION ACTIVITY

Construction activity can impact structural performance of adjacent buildings and other installations. The influence of all anticipated construction activities should be considered by the contractor, owner, architect and prime engineer in consultation with a geotechnical engineer when the final design and construction techniques, and construction sequence are known.

1.14 OBSERVATIONS DURING CONSTRUCTION

Because of the nature of geological deposits, the judgmental nature of geotechnical engineering, and the potential of adverse circumstances arising from construction activity, observations during site preparation, excavation and construction should be carried out by a geotechnical engineer. These observations may then serve as the basis for confirmation and/or alteration of geotechnical recommendations or design guidelines presented herein.

1.15 DRAINAGE SYSTEMS

Unless otherwise specified, it is a condition of this report that effective temporary and permanent drainage systems are required and that they must be considered in relation to project purpose and function. Where temporary or permanent drainage systems are installed within or around a structure, these systems must protect the structure from loss of ground due to mechanisms such as internal erosion and must be designed so as to assure continued satisfactory performance of the drains. Specific design details regarding the geotechnical aspects of such systems (e.g. bedding material, surrounding soil, soil cover, geotextile type) should be reviewed by the geotechnical engineer to confirm the performance of the system is consistent with the conditions used in the geotechnical design.

1.16 DESIGN PARAMETERS

Bearing capacities for Limit States or Allowable Stress Design, strength/stiffness properties and similar geotechnical design parameters quoted in this report relate to a specific soil or rock type and condition. Construction activity and environmental circumstances can materially change the condition of soil or rock. The elevation at which a soil or rock type occurs is variable. It is a requirement of this report that structural elements be founded in and/or upon geological materials of the type and in the condition used in this report. Sufficient observations should be made by qualified geotechnical personnel during construction to assure that the soil and/or rock conditions considered in this report in fact exist at the site.

1.17 SAMPLES

TETRA TECH will retain all soil and rock samples for 30 days after this report is issued. Further storage or transfer of samples can be made at the Client's expense upon written request, otherwise samples will be discarded.

1.18 APPLICABLE CODES, STANDARDS, GUIDELINES & BEST PRACTICE

This document has been prepared based on the applicable codes, standards, guidelines or best practice as identified in the report. Some mandated codes, standards and guidelines (such as ASTM, AASHTO Bridge Design/Construction Codes, Canadian Highway Bridge Design Code, National/Provincial Building Codes) are routinely updated and corrections made. TETRA TECH cannot predict nor be held liable for any such future changes, amendments, errors or omissions in these documents that may have a bearing on the assessment, design or analyses included in this report.

TETRA TECH

Doc ID: c2785cc94a83cebef7dfe33a7142486261d3887b

Appendix E-1 – 2024 Site Investigation Program Instrumentation Summary (Tetra Tech 2025a)

Doc ID: c2785cc94a83cebef7dfe33a7142486261d3887b

TETRA TECH

TECHNICAL MEMO

ISSUED FOR USE

To:	Aaron Marsh, P.E. - Tailings Manager	**Date:**	March 4, 2025
cc:	Ian MacIntyre, P.Eng. Gary Koop, M.Eng., P.Eng.	**Memo No.:**	001
From:	Yvonne Qiu, M.Eng., P.Eng. Shawn Matthies, P.Eng.	**File:**	704-ENG.WARC04673-02
Subject:	2024 Site Investigation Program Instrumentation Summary DSTF Phase 1 – Keno Hill Mine, YT		

1.0 INTRODUCTION

Tetra Tech Canada Inc. (Tetra Tech) was retained by Alexco Keno Hill Mining Corp. (AKHM) to conduct a geotechnical site investigation for the Phase 1 (P1) Dry Stacked Tailings Facility (DSTF) at the Keno Hill Silver District Mining Operations (Keno Hill) near Keno City, Yukon.

This technical memorandum provides a summary of the P1 instrument locations and installation details.

2.0 INSTRUMENTATION DETAILS

Instrumentation installed during the P1 geotechnical site investigation program consisted of:

- Four slope indicators (SIs);
- Two ground temperature cables (GTCs); and
- Six vibrating wire piezometers (VWPs), installed in two boreholes (i.e., three VWPs per borehole).

SIs were installed in boreholes BH24-P1-04A, BH24-P1-07, BH24-P1-08, and BH24-P1-09. VWPs were installed in boreholes BH24-P1-01 and BH24-P1-06. GTCs were installed in boreholes BH24-P1-02 and BH24-P1-05 inside of nominal 25 mm PVC pipe filled with silicone oil.

VWPs and GTCs were connected to RSTAR Affinity dataloggers manufactured by Orica Ltd. (Orica, formerly operating as RST Instruments Ltd.) and configured to collect readings at 24-hour intervals. Instrument readings can be downloaded via Bluetooth using an Android phone with the RSTAR Affinity Field App provided by Orica. The dataloggers are capable of automated, wireless data telemetry when connected to an RSTAR Affinity gateway, however gateway installation was not included in the P1 investigation program.

The instruments should be monitored in accordance with the “Instrumentation and Monitoring Plan – DSTF Phase 2 East” (Tetra Tech 2024), and the Operations, Maintenance, and Surveillance Manual (AKHM 2024). Tetra Tech can provide remote support or on-site training for collecting SI readings and using the RSTAR Affinity Field App, if desired.

A summary of instrumentation details is provided in Table 2-1. Figure 1 shows the investigation area and completed borehole locations. The locations of specific structures and the instrumentation are shown in Figure 2.

Tetra Tech Canada Inc.
61 Wasson Place
Whitehorse, YT Y1A 0H7 CANADA
Tel 867.668.3068 Fax 867.668.4349

Table 2-1: Summary of Instrumentation Details

Location (Borehole ID)	Instrument Type	Serial No.	Note	Installation Depth (m b.g.s.)[1][2]	Tip Elevation (masl)[1]	Surface Elevation (masl)[1]	Installation Date	Datalogger ID	Datalogger wiring[3]
BH24-P1-01	VWP	VW195839	Tip A	16.5	904.39	920.89	2024-11-20	ADL04315	M3C1 (VW), M3C2 (TH)
		VW194678	Tip B	9.1	911.79				M2C1 (VW), M2C2 (TH)
		VW194676	Tip C	8.1	912.79				M1C1 (VW), M1C2 (TH)
BH24-P1-02	GTC	TS6096	–	3.5 m to 21.5 m, 2 m spacing	899.66	921.16	2025-02-18	ADL03605	M1C1 to M5C2
BH24-P1-04A	SI	70mm SI casing		8.1 (stickup = 0.9 m)	908.85	916.95	2024-12-04	N/A	
BH24-P1-05	GTC	TS6095	–	1.9 to 15.4 m, 1.5 m spacing	939.00	945.40	2024-12-06	ADL04320	M1C1 to M5C2
BH24-P1-06	VWP	VW194661	Tip A	10.2	933.41	943.61	2024-12-06	ADL04310	M3C1 (VW), M3C2 (TH)
		VW194689	Tip B	9.2	934.41				M2C1 (VW), M2C2 (TH)
		VW196101	Tip C	7.7	935.91				M1C1 (VW), M1C2 (TH)
BH24-P1-07	SI	70mm SI casing		13.1 (stickup = 0.4 m)	925.81	938.91	2024-12-07	N/A	
BH24-P1-08	SI	70mm SI casing		6.1 (stickup = 0.9 m)	925.33	931.43	2024-12-08	N/A	
BH24-P1-09	SI	70mm SI casing		4.7 (stickup = 0.8 m)	919.02	923.72	2024-12-10	N/A	

NOTES:

(1) "m b.g.s." = metres below ground surface; "masl" = metres above sea level

(2) Installation depths for GTC and SIs indicate actual bottom reading depths (i.e., not necessarily bottom of drilled hole)

(3) "M" = module; "C" = channel.
Each VWP occupies one datalogger channel for the vibrating wire (VW) sensor and one for the thermistor (TH) sensor. Each GTC thermistor node occupies one datalogger channel and GTC nodes were wired sequentially from shallow to deep.

Doc ID: c2785cc94a83cebef7dfe33a7142486261d3887b

3.0 LIMITATIONS OF REPORT

This report and its contents are intended for the sole use of Alexco Keno Hill Mining Corp. (AKHM) and their agents. Tetra Tech Canada Inc. (Tetra Tech) does not accept any responsibility for the accuracy of any of the data, the analysis, or the recommendations contained or referenced in the report when the report is used or relied upon by any Party other than Alexco Keno Hill Mining Corp. (AKHM), or for any Project other than the proposed development at the subject site. Any such unauthorized use of this report is at the sole risk of the user. Use of this document is subject to the Limitations on the Use of this Document attached in the Appendix or Contractual Terms and Conditions executed by both parties.

Doc ID: c2785cc94a83cebef7dfe33a7142486261d3887b

4.0 CLOSURE

We trust this technical memo meets your present requirements. If you have any questions or comments, please contact the undersigned.

Respectfully submitted,
Tetra Tech Canada Inc.

FILE: 704-ENG.WARC04673-02
FILE: 704-ENG.WARC04673-02
FILE: 704-ENG.WARC04673-02

Prepared by:
Yvonne Qiu, M.Eng., P.Eng.
Intermediate Geotechnical Engineer
Direct Line: 587.460.3613
Yvonne.Qiu@tetratech.com

FILE: 704-ENG.WARC04673-02
FILE: 704-ENG.WARC04673-02
FILE: 704-ENG.WARC04673-02

Prepared by:
Shawn Matthies, P.Eng.
Geotechnical Engineer, Arctic Group
Direct Line: 867.668.9238
Shawn.Matthies@tetratech.com

FILE: 704-ENG.WARC04673-02
FILE: 704-ENG.WARC04673-02
FILE: 704-ENG.WARC04673-02

Reviewed by:
Ian MacIntyre, P.Eng.
Geotechnical Engineer – Team Lead, Arctic Group
Direct Line: 867.668.9240
Ian.MacIntyre@tetratech.com

/et

Enclosure: References
Figures
Limitations on the Use of this Document

REFERENCES

AKHM 2024. Operations, Maintenance, and Surveillance (OMS) Manual - Rev 2, Dry Stack Tailings Facility, Keno Hill Silver District Mining Operations. Prepared by AKHM, dated September 2024.

Tetra Tech 2024. Instrumentation and Monitoring Plan – DSTF Phase 2 East Keno Hill Mine, YT. Submitted to AKHM, August 22, 2024. Tetra Tech Project File 704-ENG.WARC04415-10.

Doc ID: c2785cc94a83cebef7dfe33a7142486261d3887b

FIGURES

Figure 1 Site Plan with As-built SCPT and Borehole Locations
Figure 2 DSTF Phase 1 Instrumentation Plan

Doc ID: c2785cc94a83cebef7dfe33a7142486261d3887b

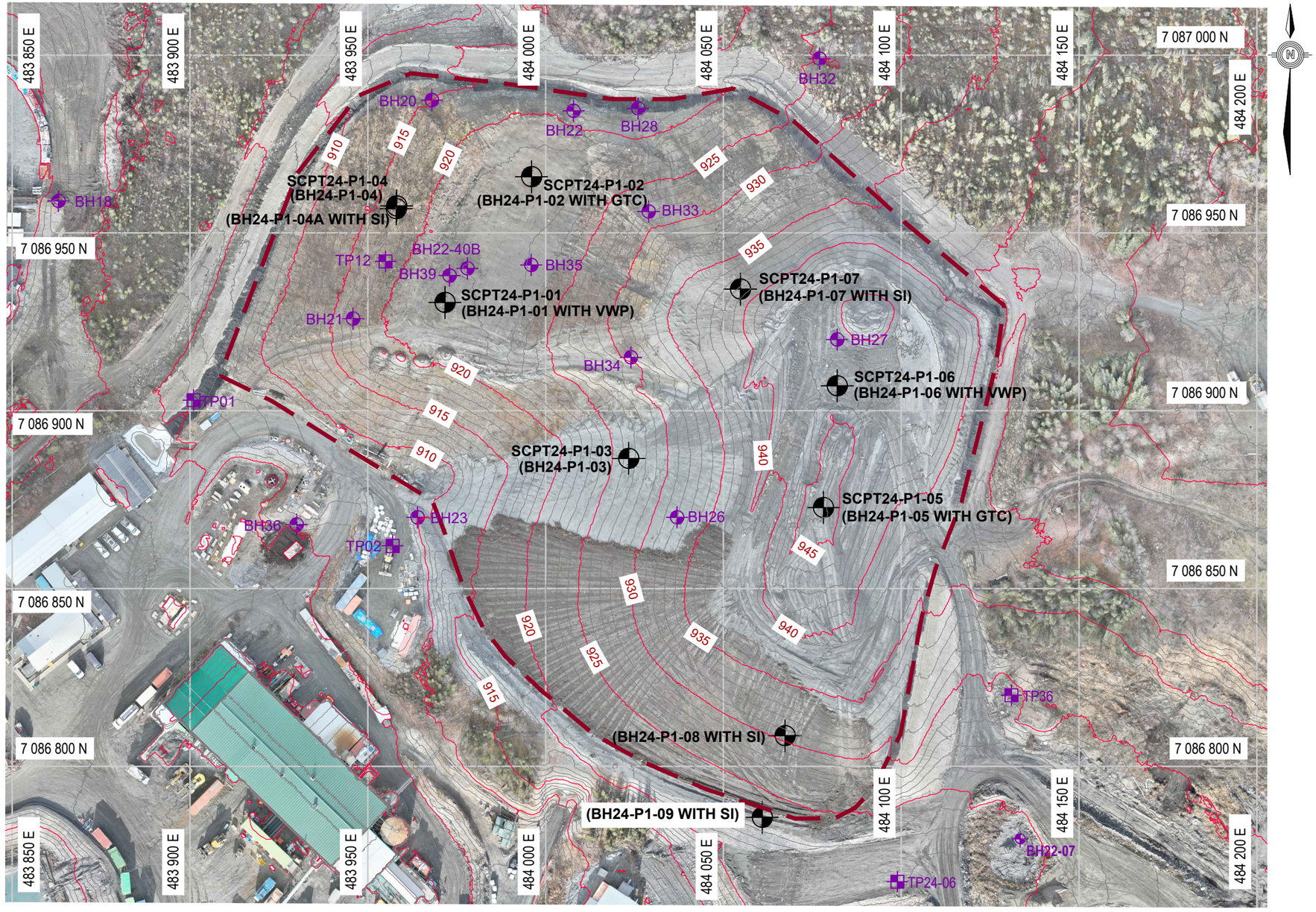

DSTF PHASE 1 SITE INVESTIGATION PROGRAM AS-BUILT BOREHOLE				
BOREHOLE ID	NORTHING (m)	EASTING (m)	GROUND SURFACE ELEVATION (m)	DRILL DEPTH (m)
BH24-P1-01	7 086 930.4	483 971.7	920.89	17.0
BH24-P1-02	7 086 965.8	483 996.0	921.16	21.5
BH24-P1-03	7 086 886.6	484 023.4	926.97	8.9
BH24-P1-04	7 086 957.6	483 958.1	916.86	9.1
BH24-P1-04A	7 086 956.8	483 958.0	916.95	9.1
BH24-P1-05	7 086 872.8	484 078.2	945.40	15.4
BH24-P1-06	7 086 907.3	484 081.8	943.61	13.1
BH24-P1-07	7 086 934.2	484 054.8	938.91	14.0
BH24-P1-08	7 086 808.6	484 067.3	931.43	7.4
BH24-P1-09	7 086 785.7	484 060.9	923.72	6.0

LEGEND:

- AS-BUILT 2024 BOREHOLE AND SCPT
- HISTORICAL BOREHOLE
- HISTORICAL TESTPIT

SCALE 1:1250

10 0 10 30 50m

NOTE:

1. SITE IMAGERY AND EXISTING GROUND OBTAINED FROM PROPELLER PROVIDED BY ALEXCO KENO HILL CORPORATION. (AKHM) FROM OCTOBER 2024 SURVEY.
2. CONTOUR INTERVAL 1 m.
3. THE SCPT LOCATIONS AND BOREHOLE LOCATIONS ACCOMPANY EACH OTHER WITHIN AN APPROXIMATE 5-METER RADIUS.

CLIENT

Hecla MINING COMPANY

TETRA TECH

DRY STACKED TAILINGS FACILITY
KENO HILL DISTRICT MILL SITE, YUKON

PHASE I SITE INVESTIGATION
SITE PLAN WITH AS-BUILT SCPT AND BOREHOLE LOCATIONS

PROJECT No.	OFFICE	DES	CKD	REV	DRAWING
704-ENG.WARC04673-02	EDMONTON	YQ	IM	A	FIGURE 1
DATE:	SHEET No.	DWN	APP	STATUS	
FEBRUARY 2025	1 of 1	YQ	-	IFU	

C:\Users\YVONNE.QIU\OneDrive - Tetra Tech, Inc\Desktop\DSTF P1 Site Investigation\As-built\DSTF Phase 1 Site Investigation_As-built Borehole Locations-20250122.dwg [FIGURE 1] January 22, 2025 - 5:19:07 pm (BY: QIU, YVONNE)

Doc ID: c2785cc94a83cebef7dfe33a7142486261d3887b

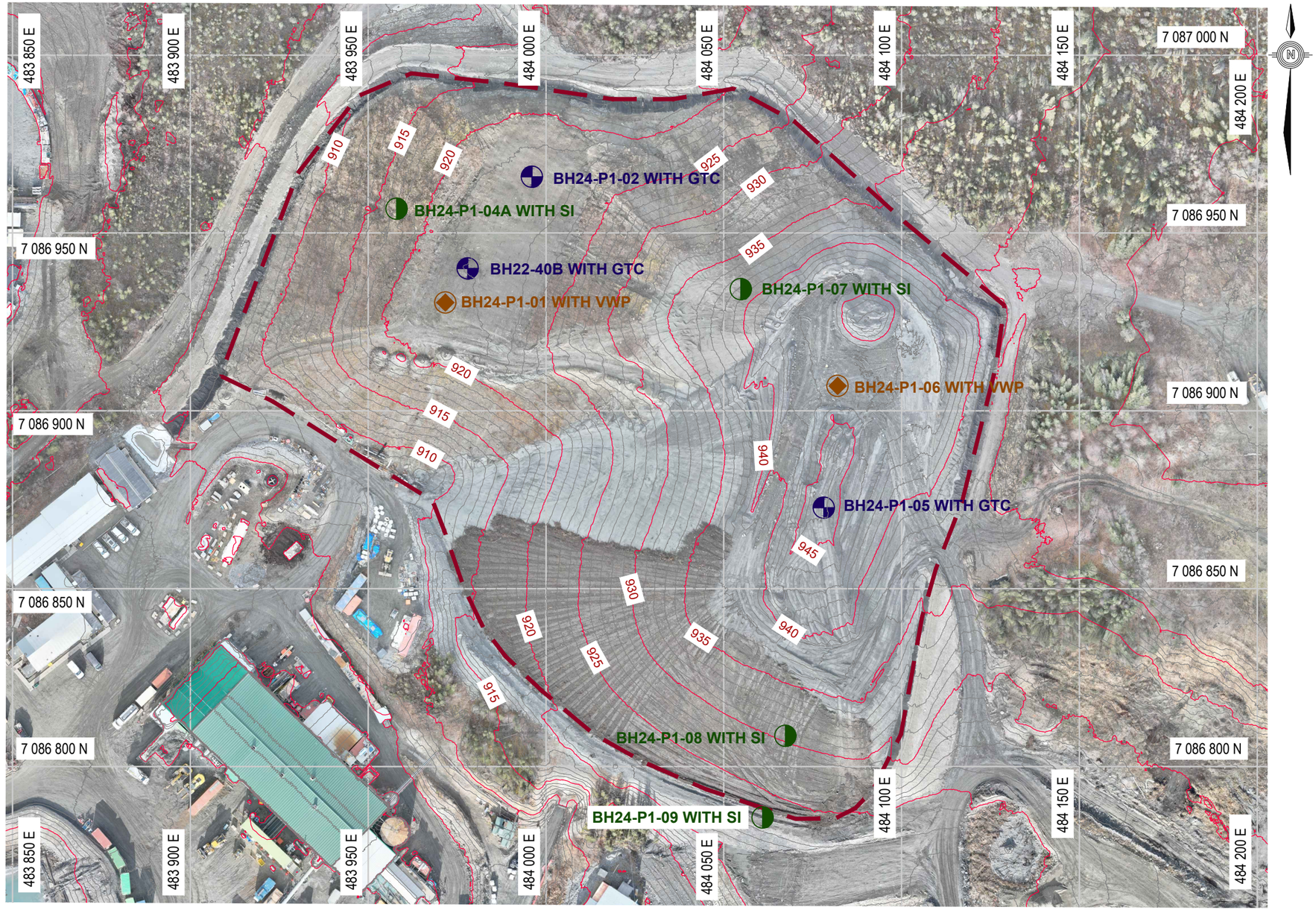

LEGEND:

- ACTIVE SLOPE INCLINOMETER (SI)
- ACTIVE VIBRATING WIRE PIEZOMETER (VWP)
- ACTIVE GROUND TEMPERATURE CABLE (GTC)

NOTE:

1. SITE IMAGERY AND EXISTING GROUND OBTAINED FROM PROPELLER PROVIDED BY ALEXCO KENO HILL CORPORATION. (AKHM) FROM OCTOBER 2024 SURVEY.
2. CONTOUR INTERVAL 1 m.

SCALE 1:1250

10 0 10 30 50m

CLIENT

Hecla MINING COMPANY

TETRA TECH

DRY STACKED TAILINGS FACILITY
KENO HILL DISTRICT MILL SITE, YUKON

PHASE I INSTRUMENTATION PLAN

PROJECT No.	OFFICE	DES	CKD	REV	DRAWING
704-ENG.WARC04673-02	EDMONTON	YQ	IM	B	**FIGURE 2**
DATE:	SHEET No.	DWN	APP	STATUS	
FEBRUARY 2025	1 of 1	YQ	-	IFU	

C:\Users\YVONNE.QIU\OneDrive - Tetra Tech, Inc\Desktop\DSTF P1 Site Investigation\As-built\DSTF Phase 1 Site Investigation_As-built Borehole Locations-20250109.dwg [FIGURE 2] January 09, 2025 - 11:43:55 am (BY: QIU, YVONNE)

Doc ID: c2785cc94a83cebef7dfe33a7142486261d3887b

APPENDIX A

TETRA TECH'S LIMITATIONS ON THE USE OF THIS DOCUMENT

Doc ID: c2785cc94a83cebef7dfe33a7142486261d3887b

LIMITATIONS ON USE OF THIS DOCUMENT

GEOTECHNICAL

1.1 USE OF DOCUMENT AND OWNERSHIP

This document pertains to a specific site, a specific development, and a specific scope of work. The document may include plans, drawings, profiles and other supporting documents that collectively constitute the document (the “Professional Document”).

The Professional Document is intended for the sole use of TETRA TECH’s Client (the “Client”) as specifically identified in the TETRA TECH Services Agreement or other Contractual Agreement entered into with the Client (either of which is termed the “Contract” herein). TETRA TECH does not accept any responsibility for the accuracy of any of the data, analyses, recommendations or other contents of the Professional Document when it is used or relied upon by any party other than the Client, unless authorized in writing by TETRA TECH.

Any unauthorized use of the Professional Document is at the sole risk of the user. TETRA TECH accepts no responsibility whatsoever for any loss or damage where such loss or damage is alleged to be or, is in fact, caused by the unauthorized use of the Professional Document.

Where TETRA TECH has expressly authorized the use of the Professional Document by a third party (an “Authorized Party”), consideration for such authorization is the Authorized Party’s acceptance of these Limitations on Use of this Document as well as any limitations on liability contained in the Contract with the Client (all of which is collectively termed the “Limitations on Liability”). The Authorized Party should carefully review both these Limitations on Use of this Document and the Contract prior to making any use of the Professional Document. Any use made of the Professional Document by an Authorized Party constitutes the Authorized Party’s express acceptance of, and agreement to, the Limitations on Liability.

The Professional Document and any other form or type of data or documents generated by TETRA TECH during the performance of the work are TETRA TECH’s professional work product and shall remain the copyright property of TETRA TECH.

The Professional Document is subject to copyright and shall not be reproduced either wholly or in part without the prior, written permission of TETRA TECH. Additional copies of the Document, if required, may be obtained upon request.

1.2 ALTERNATIVE DOCUMENT FORMAT

Where TETRA TECH submits electronic file and/or hard copy versions of the Professional Document or any drawings or other project-related documents and deliverables (collectively termed TETRA TECH’s “Instruments of Professional Service”), only the signed and/or sealed versions shall be considered final. The original signed and/or sealed electronic file and/or hard copy version archived by TETRA TECH shall be deemed to be the original. TETRA TECH will archive a protected digital copy of the original signed and/or sealed version for a period of 10 years.

Both electronic file and/or hard copy versions of TETRA TECH’s Instruments of Professional Service shall not, under any circumstances, be altered by any party except TETRA TECH. TETRA TECH’s Instruments of Professional Service will be used only and exactly as submitted by TETRA TECH.

Electronic files submitted by TETRA TECH have been prepared and submitted using specific software and hardware systems. TETRA TECH makes no representation about the compatibility of these files with the Client’s current or future software and hardware systems.

1.3 STANDARD OF CARE

Services performed by TETRA TECH for the Professional Document have been conducted in accordance with the Contract, in a manner consistent with the level of skill ordinarily exercised by members of the profession currently practicing under similar conditions in the jurisdiction in which the services are provided. Professional judgment has been applied in developing the conclusions and/or recommendations provided in this Professional Document. No warranty or guarantee, express or implied, is made concerning the test results, comments, recommendations, or any other portion of the Professional Document.

If any error or omission is detected by the Client or an Authorized Party, the error or omission must be immediately brought to the attention of TETRA TECH.

1.4 DISCLOSURE OF INFORMATION BY CLIENT

The Client acknowledges that it has fully cooperated with TETRA TECH with respect to the provision of all available information on the past, present, and proposed conditions on the site, including historical information respecting the use of the site. The Client further acknowledges that in order for TETRA TECH to properly provide the services contracted for in the Contract, TETRA TECH has relied upon the Client with respect to both the full disclosure and accuracy of any such information.

1.5 INFORMATION PROVIDED TO TETRA TECH BY OTHERS

During the performance of the work and the preparation of this Professional Document, TETRA TECH may have relied on information provided by third parties other than the Client.

While TETRA TECH endeavours to verify the accuracy of such information, TETRA TECH accepts no responsibility for the accuracy or the reliability of such information even where inaccurate or unreliable information impacts any recommendations, design or other deliverables and causes the Client or an Authorized Party loss or damage.

1.6 GENERAL LIMITATIONS OF DOCUMENT

This Professional Document is based solely on the conditions presented and the data available to TETRA TECH at the time the data were collected in the field or gathered from available databases.

The Client, and any Authorized Party, acknowledges that the Professional Document is based on limited data and that the conclusions, opinions, and recommendations contained in the Professional Document are the result of the application of professional judgment to such limited data.

The Professional Document is not applicable to any other sites, nor should it be relied upon for types of development other than those to which it refers. Any variation from the site conditions present, or variation in assumed conditions which might form the basis of design or recommendations as outlined in this document, at or on the development proposed as of the date of the Professional Document requires a supplementary exploration, investigation, and assessment.

TETRA TECH is neither qualified to, nor is it making, any recommendations with respect to the purchase, sale, investment or development of the property, the decisions on which are the sole responsibility of the Client.

TETRA TECH

Doc ID: c2785cc94a83cebef7dfe33a7142486261d3887b

1.7 ENVIRONMENTAL AND REGULATORY ISSUES

Unless stipulated in the report, TETRA TECH has not been retained to explore, address or consider and has not explored, addressed or considered any environmental or regulatory issues associated with development on the subject site.

1.8 NATURE AND EXACTNESS OF SOIL AND ROCK DESCRIPTIONS

Classification and identification of soils and rocks are based upon commonly accepted systems, methods and standards employed in professional geotechnical practice. This report contains descriptions of the systems and methods used. Where deviations from the system or method prevail, they are specifically mentioned.

Classification and identification of geological units are judgmental in nature as to both type and condition. TETRA TECH does not warrant conditions represented herein as exact, but infers accuracy only to the extent that is common in practice.

Where subsurface conditions encountered during development are different from those described in this report, qualified geotechnical personnel should revisit the site and review recommendations in light of the actual conditions encountered.

1.9 LOGS OF TESTHOLES

The testhole logs are a compilation of conditions and classification of soils and rocks as obtained from field observations and laboratory testing of selected samples. Soil and rock zones have been interpreted. Change from one geological zone to the other, indicated on the logs as a distinct line, can be, in fact, transitional. The extent of transition is interpretive. Any circumstance which requires precise definition of soil or rock zone transition elevations may require further investigation and review.

1.10 STRATIGRAPHIC AND GEOLOGICAL INFORMATION

The stratigraphic and geological information indicated on drawings contained in this report are inferred from logs of test holes and/or soil/rock exposures. Stratigraphy is known only at the locations of the test hole or exposure. Actual geology and stratigraphy between test holes and/or exposures may vary from that shown on these drawings. Natural variations in geological conditions are inherent and are a function of the historical environment. TETRA TECH does not represent the conditions illustrated as exact but recognizes that variations will exist. Where knowledge of more precise locations of geological units is necessary, additional exploration and review may be necessary.

1.11 PROTECTION OF EXPOSED GROUND

Excavation and construction operations expose geological materials to climatic elements (freeze/thaw, wet/dry) and/or mechanical disturbance which can cause severe deterioration. Unless otherwise specifically indicated in this report, the walls and floors of excavations must be protected from the elements, particularly moisture, desiccation, frost action and construction traffic.

1.12 SUPPORT OF ADJACENT GROUND AND STRUCTURES

Unless otherwise specifically advised, support of ground and structures adjacent to the anticipated construction and preservation of adjacent ground and structures from the adverse impact of construction activity is required.

1.13 INFLUENCE OF CONSTRUCTION ACTIVITY

Construction activity can impact structural performance of adjacent buildings and other installations. The influence of all anticipated construction activities should be considered by the contractor, owner, architect and prime engineer in consultation with a geotechnical engineer when the final design and construction techniques, and construction sequence are known.

1.14 OBSERVATIONS DURING CONSTRUCTION

Because of the nature of geological deposits, the judgmental nature of geotechnical engineering, and the potential of adverse circumstances arising from construction activity, observations during site preparation, excavation and construction should be carried out by a geotechnical engineer. These observations may then serve as the basis for confirmation and/or alteration of geotechnical recommendations or design guidelines presented herein.

1.15 DRAINAGE SYSTEMS

Unless otherwise specified, it is a condition of this report that effective temporary and permanent drainage systems are required and that they must be considered in relation to project purpose and function. Where temporary or permanent drainage systems are installed within or around a structure, these systems must protect the structure from loss of ground due to mechanisms such as internal erosion and must be designed so as to assure continued satisfactory performance of the drains. Specific design details regarding the geotechnical aspects of such systems (e.g. bedding material, surrounding soil, soil cover, geotextile type) should be reviewed by the geotechnical engineer to confirm the performance of the system is consistent with the conditions used in the geotechnical design.

1.16 DESIGN PARAMETERS

Bearing capacities for Limit States or Allowable Stress Design, strength/stiffness properties and similar geotechnical design parameters quoted in this report relate to a specific soil or rock type and condition. Construction activity and environmental circumstances can materially change the condition of soil or rock. The elevation at which a soil or rock type occurs is variable. It is a requirement of this report that structural elements be founded in and/or upon geological materials of the type and in the condition used in this report. Sufficient observations should be made by qualified geotechnical personnel during construction to assure that the soil and/or rock conditions considered in this report in fact exist at the site.

1.17 SAMPLES

TETRA TECH will retain all soil and rock samples for 30 days after this report is issued. Further storage or transfer of samples can be made at the Client's expense upon written request, otherwise samples will be discarded.

1.18 APPLICABLE CODES, STANDARDS, GUIDELINES & BEST PRACTICE

This document has been prepared based on the applicable codes, standards, guidelines or best practice as identified in the report. Some mandated codes, standards and guidelines (such as ASTM, AASHTO Bridge Design/Construction Codes, Canadian Highway Bridge Design Code, National/Provincial Building Codes) are routinely updated and corrections made. TETRA TECH cannot predict nor be held liable for any such future changes, amendments, errors or omissions in these documents that may have a bearing on the assessment, design or analyses included in this report.

TETRA TECH

Doc ID: c2785cc94a83cebef7dfe33a7142486261d3887b

Appendix E-2 – Instrumentation Data Collection Guide. DSTF Phase 2 and Phase 2 East (Tetra Tech 2025d)

Doc ID: c2785cc94a83cebef7dfe33a7142486261d3887b

TETRA TECH

TECHNICAL MEMO

ISSUED FOR USE

To:	Ryan Tilstra – Technical Services Manager	**Date:**	May 21, 2025
cc:	Liam McGrail – Senior Surface Engineer Aaron Marsh, P.E. – Corp. Tailings Manager	**Memo No.:**	TM01
From:	Shawn Matthies, P.Eng.	**File:**	704-ENG.WARC04673-05.002
Subject:	Instrumentation Data Collection Guide DSTF Phase 1 and Phase 2 East, Keno Hill Mine, Yukon		

1.0 INTRODUCTION

NND EBA Land Protection Corp., operating as NELPCo Limited Partnership (NELPCo) was retained by Alexco Keno Hill Mining Corp. (AKHM) to provide Engineer of Record (EOR) services related to the operation and construction of the dry stack tailings facility (DSTF) at Keno Hill Mine near Keno City, Yukon. EOR services are provided by Tetra Tech Canada Inc. (Tetra Tech) as NELPCo's primary engineering services provider.

Instrumentation data collection, processing, and analysis for DSTF management is carried out in accordance with the Instrumentation Monitoring Plan (Tetra Tech 2024, file no. 704-ENG.WARC04415-10-2024-P2E-IMP) and the DSTF OMS manual. This memorandum is intended to supplement these documents and provide instructions for field staff responsible for collecting instrumentation readings.

2.0 INSTRUMENTATION SUMMARY

Instrumentation installed on the DSTF consists of:

- Four slope inclinometers (SI), which measure horizontal deformation along a nominally vertical profile;
- Eight thermistors/ground temperature cables (GTC), which measure ground temperature, typically at several depths along each cable to obtain a ground temperature profile; and
- Eight vibrating wire piezometers (VWP), installed in four locations, which measure porewater pressure and temperature. Porewater pressure measurements by VWPs allow for the estimation of groundwater levels.

Most GTCs and VWPs at the DSTF are connected to dataloggers which record and store measurements at regular intervals. Two types of dataloggers are currently installed on site:

- Four Affinity dataloggers are connected to GTCs and VWPs on DSTF Phase 1; and
- Two DT2040 dataloggers connected to GTCs and VWPs on DSTF Phase 2 East.

Three GTCs are not connected to dataloggers and are read monthly using a manual switchbox and multimeter. Instrument and datalogger locations and reading frequencies are summarized in Table 1. Instrument locations are shown on the attached Figure 1.

Tetra Tech Canada Inc.
61 Wasson Place
Whitehorse, YT Y1A 0H7 CANADA
Tel 867.668.3068 Fax 867.668.4349

Table 1: Instrument and Datalogger Locations and Reading Frequencies

Site Location	Instrument Type	Instrument ID	Reading Location Coordinates	Datalogger Type, Serial No.	SI Reading Depth	Reading/Download Frequency
DSTF Phase 1	GTC	BH22-40B	8V; 483,978E; 7,086,940N	–	–	Monthly
	GTC	BH24-P1-02	8V; 483,996E; 7,086,966N	Affinity, **ADL03605**	–	Monthly
	GTC	BH24-P1-05	8V; 484,078E; 7,086,873N	Affinity, **ADL04320**	–	Monthly
	VWP (nested)	BH24-P1-01	8V; 483,972E; 7,086,930N	Affinity, **ADL04315**	–	Monthly
	VWP (nested)	BH24-P1-06	8V; 484,082E; 7,086,907N	Affinity, **ADL04310**	–	Monthly
	SI	BH24-P1-04A	8V; 483,958E; 7,086,957N	–	Bottom: 9.0 m Top: 0.5 m	Monthly (2025) Quarterly (2026+)
	SI	BH24-P1-07	8V; 484,055E; 7,086,934N	–	Bottom: 13.5 m Top: 0.5 m	Monthly (2025) Quarterly (2026+)
	SI	BH24-P1-08	8V; 484,067E; 7,086,809N	–	Bottom: 7.0 m Top: 0.5 m	Monthly (2025) Quarterly (2026+)
	SI	BH24-P1-09	8V; 484,061E; 7,086,786N	–	Bottom: 5.5 m Top: 0.5 m	Monthly (2025) Quarterly (2026+)
DSTF Phase 2 East	GTC	BH22-01	8V; 484,025E; 7,086,635N	–	–	Monthly
	GTC	BH22-05	8V; 484,211E; 7,086,789N	DT2040, **DT02941**	–	Monthly
	GTC	BH22-06	8V; 484,292E; 7,086,719N	–	–	Monthly
	GTC	BH22-07	8V; 484,211E; 7,086,789N	DT2040, **DT02942**	–	Monthly
	GTC	BH22-09	8V; 484,211E; 7,086,789N	DT2040, **DT02942**	–	Monthly
	VWP	VWP-P2E-01	8V; 484,211E; 7,086,789N	DT2040, **DT02941**	–	Monthly
	VWP	VWP-P2E-02	8V; 484,211E; 7,086,789N	DT2040, **DT02941**	–	Monthly

Note: Slope inclinometers are to be monitored on a monthly basis for the first 12 months after installation, with subsequent readings conducted quarterly.

3.0 INSTRUMENTATION DATA COLLECTION

Instrumentation data should be collected in accordance with the frequencies presented in Table 1. Tetra Tech is responsible for conducting monthly SI readings throughout 2025. Starting in 2026, the SI reading frequency will be reduced to quarterly, unless significant ongoing slope movement is observed, in which case the monitoring frequency may be adjusted accordingly.

3.1 Ground Temperature Cables and Vibrating Wire Piezometers

Most GTC and VWP data collection is carried out by downloading data from the dataloggers. GTC data collection from BH22-01, BH22-06, and BH22-40B is carried out using a manual switchbox and multimeter.

3.1.1 Affinity Datalogger Downloads

Affinity datalogger data is downloaded using the *RSTAR Affinity Field App* published by Orica. This app is only available for Android devices. Prior to collecting readings, field staff will need an Affinity account created by an organization administrator. This account can be requested through Tetra Tech.

Once field staff have installed the *RSTAR Affinity Field App* and obtained credentials, the following steps can be used to download Affinity datalogger data:

1. Open the RSTAR Affinity Field App and enter **hecla.**rstaraffinity.cloud as the cloud server. Tap **Proceed**.
2. Log in with the Affinity email and password and select the site **Keno Hill**.
3. Travel within Bluetooth range of an Affinity datalogger. Tap the desired datalogger serial number to connect.
4. From the Datalogger Profile page, tap **Logger Options** (bottom right of screen).
5. Tap **Sync Logger Data**. If prompted, select all logger data for sync.
6. Repeat steps 3 to 5 for each Affinity datalogger, keeping track of which datalogger serial numbers have been synchronized.
7. After synchronizing all dataloggers, repeat steps 1 to 2 in a location with internet access to allow the downloaded data to synchronize with the cloud server.

3.1.1.1 External Resources

- RSTAR Affinity Field App download:
  https://play.google.com/store/apps/details?id=com.rstinstruments.affinity&hl=en-US
- RSTAR Affinity Field App user guide:
  https://rstinstruments.com/wp-content/uploads/PSM0002A-RSTAR-Affinity-Field-App-User-Guide.pdf

3.1.2 DT2040 Datalogger Downloads

DT2040 datalogger data is downloaded using the *DT Logger Host* software published by Orica. A Windows laptop with a USB-A port and a USB-A to mini-USB cable are required to collect readings. Prior to collecting readings, *DT Logger Host* should be installed on the field laptop.

Once field staff have installed *DT Logger Host*, the following steps can be used to download DT2040 datalogger data:

1. On the laptop, **turn off Bluetooth** and open DT Logger Host.
2. Unscrew the mini-USB port cover on the side of the datalogger and connect the laptop to the datalogger.
3. The **Message** readout on the bottom of the DT Logger Host window should indicate that the software is communicating with the datalogger. If there is no communication, try the following:
    a. Ensure that laptop Bluetooth is turned off;
    b. Unplug and replug the mini-USB cable;
    c. Click the **Reconnect** button on DT Logger Host;
    d. Click the DT2040 icon on the right-hand side of the DT Logger Host Window.
4. Click **Collect Data** on the Status tab of DT Logger Host. Wait for data to download.
5. When prompted, click **Append** new data.
6. Disconnect the USB cable, close the USB port cover, and repeat steps 1-5 for the other DT2040 datalogger.
7. Send downloaded files to Tetra Tech for processing.
    a. By default, data is saved in *C:\Users\<USER>\Documents\Multichannel*

3.1.2.1 External Resources

- DT Logger Host download: https://rstinstruments.com/wp-content/uploads/RST_DTLogger_Setup_1.20.0.zip
- DT Logger Host user guide: https://rstinstruments.com/wp-content/uploads/ELM0080R-DT-Logger-Host-Instruction-Manual-PC-platform.pdf

3.1.3 Manual Ground Temperature Cable Readings

Manual GTC readings are collected using a multimeter and switchbox. Readings are recorded in resistance units (kilo-ohms, kΩ). The following steps can be used to collect manual GTC readings:

Plug the male Amphenol connector on the GTC into female Amphenol connector the switchbox. Tighten the outer ring of the male Amphenol connector to secure the connection. **Ensure that the Amphenol body and GTC conduit do not rotate while the outer ring is tightened. This can damage wire connections inside of the GTC.**

1. Connect the switchbox to the resistance (red) and common (black) inputs on the multimeter. These inputs are commonly labeled with an Omega (Ω) and COM symbol, respectively.
2. Turn the multimeter on to resistance mode (commonly labelled with an Omega (Ω) symbol) and set the switchbox to channel 1.
3. Record the channel number and resistance value in kΩ units. Repeat this process for all channels on the switchbox. The manual GTCs installed at Keno Hill all have 16 nodes.
4. Record the date and time of the reading.
5. Send the resistance values to Tetra Tech for processing. For quick reference, a conversion chart is included in Appendix B. Note that this is provided for approximating temperatures in the field and does not account for cable specific calibrations.

3.2 Slope Inclinometers

SI readings are collected using a Digital MEMS Inclinometer System (SI Probe) and reel. Communication with the SI probe is carried out using the *Digital Inclinometer* app published by Orica. This app is only available for Android devices.

Tetra Tech recommends that field staff review the manufacturer manual and/or complete readings alongside an experienced technician when collecting SI readings for the first time. An SI reading quick guide is included in Appendix C and is intended for use as a “refresher” reference guide, not a comprehensive manual.

Prior to collecting initial readings, field staff will need to add the SIs described in Table 1 to the Digital Inclinometer app. Readings should be collected following the steps in the manufacturer’s manual using the site convention that the “A+” groove direction is downslope.

Readings should be exported to email using the Digital Inclinometer app and provided to Tetra Tech.

Note that Tetra Tech will be completing SI data collection. This guide is included for information and reference.

3.2.1.1 External Resources

- Digital Inclinometer app: https://play.google.com/store/apps/details?id=com.rstinstruments&hl=en-US
- Digital MEMS Inclinometer System (SI Probe) manual: https://rstinstruments.com/wp-content/uploads/ICM0099D-MEMS-Digital-Inclinometer-System-with-Android-App-Instructions-Manual.pdf

Doc ID: c2785cc94a83cebef7dfe33a7142486261d3887b

- Digital Inclinometer video guides:
  https://www.youtube.com/watch?v=DY6b0pgus0o (part 1 of 2)
  https://www.youtube.com/watch?v=idfvef29T2s (part 2 of 2)

4.0 FUTURE DATA TELEMETRY (OPTIONAL)

The installed dataloggers are capable of automated data telemetry to a remote cloud server with the installation of an RSTAR Affinity Gateway. Installation of an Affinity Gateway would allow for automated, quasi-real-time instrumentation data collection without requiring technicians to download datalogger data in the field. Approximate equipment and subscription costs from Orica are provided in Table 2. An updated quote should be obtained from Orica if AKHM opts to install equipment for data telemetry in the future.

Table 2: Data Telemetry Equipment and Subscription Cost

Item Description	Unit Cost	Quantity	Extended Cost
Affinity Gateway, Cellular & Wi-Fi, cell plan for Canada, LoRaWAN US915 (NA/SA), Solar + Battery, RSTAR (900MHz North America)	$6,200.00	1	$6,200.00
RSTAR Affinity data visualization and reporting - annual software subscription - piezometer	$240.00	8	$1,920.00
RSTAR Affinity data visualization and reporting - annual software subscription - thermistor	$1,200.00	5	$6,000.00
Estimated Total (equipment and 1-year subscription)			**$14.120.00 + GST**
Estimated Recurring Annual Subscriptions			**$7,920.00 + GST**

5.0 LIMITATIONS OF REPORT

This report and its contents are intended for the sole use of Alexco Keno Hill Mining Corp. and their agents. Tetra Tech Canada Inc. (Tetra Tech) does not accept any responsibility for the accuracy of any of the data, the analysis, or the recommendations contained or referenced in the report when the report is used or relied upon by any Party other than Alexco Keno Hill Mining Corp., or for any Project other than the proposed development at the subject site. Any such unauthorized use of this report is at the sole risk of the user. Use of this document is subject to the Limitations on the Use of this Document attached in the Appendix or Contractual Terms and Conditions executed by both parties.

6.0 CLOSURE

We trust this technical memo meets your present requirements. If you have any questions or comments, please contact the undersigned.

Respectfully submitted,
Tetra Tech Canada Inc.

FILE: 704-ENG.WARC04673-05.002
FILE: 704-ENG.WARC04673-05.002
FILE: 704-ENG.WARC04673-05.002

Prepared by:
Shawn Matthies, P.Eng.
Geotechnical Engineer, Arctic Group
Engineering Practice
Direct Line: 867.668.9238
Shawn.Matthies@tetratech.com

FILE: 704-ENG.WARC04673-05.002
FILE: 704-ENG.WARC04673-05.002
FILE: 704-ENG.WARC04673-05.002

Reviewed by:
Ian MacIntyre, P.Eng.
Geotechnical Engineer, Team Lead, Arctic Group
Engineering Practice
Direct Line: 867.668.9240
Ian.MacIntyre@tetratech.com

/et

Enclosure: Figure 1: Keno Hill Instrumentation
Appendix A: Limitations on the Use of this Document
Appendix B: Ground Temperature-Resistance Conversion Table
Appendix C: Slope Inclinometer Reading Quick Guide

Doc ID: c2785cc94a83cebef7dfe33a7142486261d3887b

FIGURES

Figure 1: Keno Hill DSTF Instrumentation

Doc ID: c2785cc94a83cebef7dfe33a7142486261d3887b



LEGEND

- Datalogger
- Ground Temperature Cable (GTC)
- Ground Temperature Cable (GTC) with Datalogger
- Inclinometer
- Vibrating Wire Piezometer (VWP) with Datalogger
- Phase 2 East Data Cable

Site Feature

- Flame and Moth Pond
- Mill
- Mill Pond
- DSTF Phase 1
- DSTF Phase 2

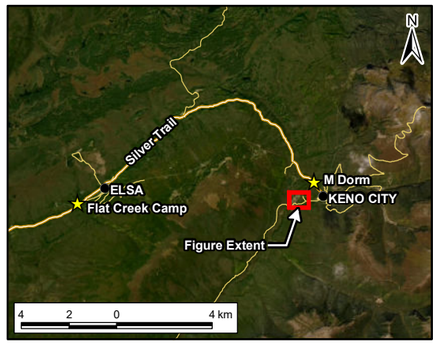

NOTES
Base data source:
Imagery from Alexco Keno Hill Mining (March 2025)
Background imagery from Google Earth; Airbus (August 2024)

STATUS
ISSUED FOR REVIEW

KENO HILL 2025 EOR SERVICES
KENO HILL MINE, YUKON

Keno Hill DSTF Instrumentation

PROJECTION UTM Zone 8	**DATUM** NAD83	**CLIENT** Alexco Keno Hill Mining Corp.
Scale: 1:2,500 — 50 25 0 50 Metres		TETRA TECH
FILE NO. WARC04673-05_Fig01_Instrumentation.mxd		
OFFICE Tt-VANC	**DWN** SL / **CKD** MRB / **APVD** SM / **REV** 0	**Figure 1**
DATE April 3, 2025	**PROJECT NO.** ENG.WARC04673-05	

G:\ENGINEERING\WARC\WARC04673-05\GIS\Maps\WARC04673-05_Fig01_Instrumentation.mxd modified 4/3/2025 by Stephanie.Leusink

Doc ID: c2785cc94a83cebef7dfe33a7142486261d3887b

APPENDIX A

TETRA TECH'S LIMITATIONS ON THE USE OF THIS DOCUMENT

Doc ID: c2785cc94a83cebef7dfe33a7142486261d3887b

LIMITATIONS ON USE OF THIS DOCUMENT

GEOTECHNICAL

1.1 USE OF DOCUMENT AND OWNERSHIP

This document pertains to a specific site, a specific development, and a specific scope of work. The document may include plans, drawings, profiles and other supporting documents that collectively constitute the document (the “Professional Document”).

The Professional Document is intended for the sole use of TETRA TECH’s Client (the “Client”) as specifically identified in the TETRA TECH Services Agreement or other Contractual Agreement entered into with the Client (either of which is termed the “Contract” herein). TETRA TECH does not accept any responsibility for the accuracy of any of the data, analyses, recommendations or other contents of the Professional Document when it is used or relied upon by any party other than the Client, unless authorized in writing by TETRA TECH.

Any unauthorized use of the Professional Document is at the sole risk of the user. TETRA TECH accepts no responsibility whatsoever for any loss or damage where such loss or damage is alleged to be or, is in fact, caused by the unauthorized use of the Professional Document.

Where TETRA TECH has expressly authorized the use of the Professional Document by a third party (an “Authorized Party”), consideration for such authorization is the Authorized Party’s acceptance of these Limitations on Use of this Document as well as any limitations on liability contained in the Contract with the Client (all of which is collectively termed the “Limitations on Liability”). The Authorized Party should carefully review both these Limitations on Use of this Document and the Contract prior to making any use of the Professional Document. Any use made of the Professional Document by an Authorized Party constitutes the Authorized Party’s express acceptance of, and agreement to, the Limitations on Liability.

The Professional Document and any other form or type of data or documents generated by TETRA TECH during the performance of the work are TETRA TECH’s professional work product and shall remain the copyright property of TETRA TECH.

The Professional Document is subject to copyright and shall not be reproduced either wholly or in part without the prior, written permission of TETRA TECH. Additional copies of the Document, if required, may be obtained upon request.

1.2 ALTERNATIVE DOCUMENT FORMAT

Where TETRA TECH submits electronic file and/or hard copy versions of the Professional Document or any drawings or other project-related documents and deliverables (collectively termed TETRA TECH’s “Instruments of Professional Service”), only the signed and/or sealed versions shall be considered final. The original signed and/or sealed electronic file and/or hard copy version archived by TETRA TECH shall be deemed to be the original. TETRA TECH will archive a protected digital copy of the original signed and/or sealed version for a period of 10 years.

Both electronic file and/or hard copy versions of TETRA TECH’s Instruments of Professional Service shall not, under any circumstances, be altered by any party except TETRA TECH. TETRA TECH’s Instruments of Professional Service will be used only and exactly as submitted by TETRA TECH.

Electronic files submitted by TETRA TECH have been prepared and submitted using specific software and hardware systems. TETRA TECH makes no representation about the compatibility of these files with the Client’s current or future software and hardware systems.

1.3 STANDARD OF CARE

Services performed by TETRA TECH for the Professional Document have been conducted in accordance with the Contract, in a manner consistent with the level of skill ordinarily exercised by members of the profession currently practicing under similar conditions in the jurisdiction in which the services are provided. Professional judgment has been applied in developing the conclusions and/or recommendations provided in this Professional Document. No warranty or guarantee, express or implied, is made concerning the test results, comments, recommendations, or any other portion of the Professional Document.

If any error or omission is detected by the Client or an Authorized Party, the error or omission must be immediately brought to the attention of TETRA TECH.

1.4 DISCLOSURE OF INFORMATION BY CLIENT

The Client acknowledges that it has fully cooperated with TETRA TECH with respect to the provision of all available information on the past, present, and proposed conditions on the site, including historical information respecting the use of the site. The Client further acknowledges that in order for TETRA TECH to properly provide the services contracted for in the Contract, TETRA TECH has relied upon the Client with respect to both the full disclosure and accuracy of any such information.

1.5 INFORMATION PROVIDED TO TETRA TECH BY OTHERS

During the performance of the work and the preparation of this Professional Document, TETRA TECH may have relied on information provided by third parties other than the Client.

While TETRA TECH endeavours to verify the accuracy of such information, TETRA TECH accepts no responsibility for the accuracy or the reliability of such information even where inaccurate or unreliable information impacts any recommendations, design or other deliverables and causes the Client or an Authorized Party loss or damage.

1.6 GENERAL LIMITATIONS OF DOCUMENT

This Professional Document is based solely on the conditions presented and the data available to TETRA TECH at the time the data were collected in the field or gathered from available databases.

The Client, and any Authorized Party, acknowledges that the Professional Document is based on limited data and that the conclusions, opinions, and recommendations contained in the Professional Document are the result of the application of professional judgment to such limited data.

The Professional Document is not applicable to any other sites, nor should it be relied upon for types of development other than those to which it refers. Any variation from the site conditions present, or variation in assumed conditions which might form the basis of design or recommendations as outlined in this document, at or on the development proposed as of the date of the Professional Document requires a supplementary exploration, investigation, and assessment.

TETRA TECH is neither qualified to, nor is it making, any recommendations with respect to the purchase, sale, investment or development of the property, the decisions on which are the sole responsibility of the Client.

TETRA TECH

Doc ID: c2785cc94a83cebef7dfe33a7142486261d3887b

1.7 ENVIRONMENTAL AND REGULATORY ISSUES

Unless stipulated in the report, TETRA TECH has not been retained to explore, address or consider and has not explored, addressed or considered any environmental or regulatory issues associated with development on the subject site.

1.8 NATURE AND EXACTNESS OF SOIL AND ROCK DESCRIPTIONS

Classification and identification of soils and rocks are based upon commonly accepted systems, methods and standards employed in professional geotechnical practice. This report contains descriptions of the systems and methods used. Where deviations from the system or method prevail, they are specifically mentioned.

Classification and identification of geological units are judgmental in nature as to both type and condition. TETRA TECH does not warrant conditions represented herein as exact, but infers accuracy only to the extent that is common in practice.

Where subsurface conditions encountered during development are different from those described in this report, qualified geotechnical personnel should revisit the site and review recommendations in light of the actual conditions encountered.

1.9 LOGS OF TESTHOLES

The testhole logs are a compilation of conditions and classification of soils and rocks as obtained from field observations and laboratory testing of selected samples. Soil and rock zones have been interpreted. Change from one geological zone to the other, indicated on the logs as a distinct line, can be, in fact, transitional. The extent of transition is interpretive. Any circumstance which requires precise definition of soil or rock zone transition elevations may require further investigation and review.

1.10 STRATIGRAPHIC AND GEOLOGICAL INFORMATION

The stratigraphic and geological information indicated on drawings contained in this report are inferred from logs of test holes and/or soil/rock exposures. Stratigraphy is known only at the locations of the test hole or exposure. Actual geology and stratigraphy between test holes and/or exposures may vary from that shown on these drawings. Natural variations in geological conditions are inherent and are a function of the historical environment. TETRA TECH does not represent the conditions illustrated as exact but recognizes that variations will exist. Where knowledge of more precise locations of geological units is necessary, additional exploration and review may be necessary.

1.11 PROTECTION OF EXPOSED GROUND

Excavation and construction operations expose geological materials to climatic elements (freeze/thaw, wet/dry) and/or mechanical disturbance which can cause severe deterioration. Unless otherwise specifically indicated in this report, the walls and floors of excavations must be protected from the elements, particularly moisture, desiccation, frost action and construction traffic.

1.12 SUPPORT OF ADJACENT GROUND AND STRUCTURES

Unless otherwise specifically advised, support of ground and structures adjacent to the anticipated construction and preservation of adjacent ground and structures from the adverse impact of construction activity is required.

1.13 INFLUENCE OF CONSTRUCTION ACTIVITY

Construction activity can impact structural performance of adjacent buildings and other installations. The influence of all anticipated construction activities should be considered by the contractor, owner, architect and prime engineer in consultation with a geotechnical engineer when the final design and construction techniques, and construction sequence are known.

1.14 OBSERVATIONS DURING CONSTRUCTION

Because of the nature of geological deposits, the judgmental nature of geotechnical engineering, and the potential of adverse circumstances arising from construction activity, observations during site preparation, excavation and construction should be carried out by a geotechnical engineer. These observations may then serve as the basis for confirmation and/or alteration of geotechnical recommendations or design guidelines presented herein.

1.15 DRAINAGE SYSTEMS

Unless otherwise specified, it is a condition of this report that effective temporary and permanent drainage systems are required and that they must be considered in relation to project purpose and function. Where temporary or permanent drainage systems are installed within or around a structure, these systems must protect the structure from loss of ground due to mechanisms such as internal erosion and must be designed so as to assure continued satisfactory performance of the drains. Specific design details regarding the geotechnical aspects of such systems (e.g. bedding material, surrounding soil, soil cover, geotextile type) should be reviewed by the geotechnical engineer to confirm the performance of the system is consistent with the conditions used in the geotechnical design.

1.16 DESIGN PARAMETERS

Bearing capacities for Limit States or Allowable Stress Design, strength/stiffness properties and similar geotechnical design parameters quoted in this report relate to a specific soil or rock type and condition. Construction activity and environmental circumstances can materially change the condition of soil or rock. The elevation at which a soil or rock type occurs is variable. It is a requirement of this report that structural elements be founded in and/or upon geological materials of the type and in the condition used in this report. Sufficient observations should be made by qualified geotechnical personnel during construction to assure that the soil and/or rock conditions considered in this report in fact exist at the site.

1.17 SAMPLES

TETRA TECH will retain all soil and rock samples for 30 days after this report is issued. Further storage or transfer of samples can be made at the Client's expense upon written request, otherwise samples will be discarded.

1.18 APPLICABLE CODES, STANDARDS, GUIDELINES & BEST PRACTICE

This document has been prepared based on the applicable codes, standards, guidelines or best practice as identified in the report. Some mandated codes, standards and guidelines (such as ASTM, AASHTO Bridge Design/Construction Codes, Canadian Highway Bridge Design Code, National/Provincial Building Codes) are routinely updated and corrections made. TETRA TECH cannot predict nor be held liable for any such future changes, amendments, errors or omissions in these documents that may have a bearing on the assessment, design or analyses included in this report.

TETRA TECH

Doc ID: c2785cc94a83cebef7dfe33a7142486261d3887b

APPENDIX B

GROUND TEMPERATURE-RESISTANCE CONVERSION TABLE

Doc ID: c2785cc94a83cebef7dfe33a7142486261d3887b

Resistance-Temperature Conversion Chart - 5K NTC Thermistors

k-Ohms	Deg C	k-Ohms2	Deg C2	k-Ohms3	Deg C3	k-Ohms4	Deg C4	k-Ohms5	Deg C5	k-Ohms6	Deg C6
38	-15.71	31.7	-12.48	25.4	-8.43	19.1	-3.05	12.8	4.83	6.5	19.03
37.9	-15.66	31.6	-12.42	25.3	-8.35	19	-2.94	12.7	4.99	6.4	19.36
37.8	-15.62	31.5	-12.36	25.2	-8.28	18.9	-2.84	12.6	5.14	6.3	19.71
37.7	-15.57	31.4	-12.31	25.1	-8.20	18.8	-2.74	12.5	5.31	6.2	20.06
37.6	-15.52	31.3	-12.25	25	-8.13	18.7	-2.64	12.4	5.47	6.1	20.41
37.5	-15.47	31.2	-12.19	24.9	-8.06	18.6	-2.54	12.3	5.63	6	20.78
37.4	-15.43	31.1	-12.13	24.8	-7.98	18.5	-2.43	12.2	5.80	5.9	21.15
37.3	-15.38	31	-12.07	24.7	-7.91	18.4	-2.33	12.1	5.96	5.8	21.52
37.2	-15.33	30.9	-12.02	24.6	-7.83	18.3	-2.22	12	6.13	5.7	21.91
37.1	-15.29	30.8	-11.96	24.5	-7.75	18.2	-2.12	11.9	6.30	5.6	22.30
37	-15.24	30.7	-11.90	24.4	-7.68	18.1	-2.01	11.8	6.47	5.5	22.70
36.9	-15.19	30.6	-11.84	24.3	-7.60	18	-1.90	11.7	6.65	5.4	23.10
36.8	-15.14	30.5	-11.78	24.2	-7.53	17.9	-1.79	11.6	6.82	5.3	23.52
36.7	-15.09	30.4	-11.72	24.1	-7.45	17.8	-1.69	11.5	7.00	5.2	23.95
36.6	-15.05	30.3	-11.66	24	-7.37	17.7	-1.58	11.4	7.18	5.1	24.38
36.5	-15.00	30.2	-11.60	23.9	-7.29	17.6	-1.47	11.3	7.36	5	24.82
36.4	-14.95	30.1	-11.54	23.8	-7.21	17.5	-1.36	11.2	7.54	4.9	25.28
36.3	-14.90	30	-11.48	23.7	-7.14	17.4	-1.25	11.1	7.72	4.8	25.74
36.2	-14.85	29.9	-11.42	23.6	-7.06	17.3	-1.13	11	7.91	4.7	26.21
36.1	-14.80	29.8	-11.36	23.5	-6.98	17.2	-1.02	10.9	8.09	4.6	26.70
36	-14.75	29.7	-11.30	23.4	-6.90	17.1	-0.91	10.8	8.28	4.5	27.20
35.9	-14.70	29.6	-11.24	23.3	-6.82	17	-0.79	10.7	8.47	4.4	27.71
35.8	-14.65	29.5	-11.17	23.2	-6.74	16.9	-0.68	10.6	8.67	4.3	28.23
35.7	-14.60	29.4	-11.11	23.1	-6.65	16.8	-0.56	10.5	8.86	4.2	28.77
35.6	-14.55	29.3	-11.05	23	-6.57	16.7	-0.45	10.4	9.06	4.1	29.32
35.5	-14.50	29.2	-10.99	22.9	-6.49	16.6	-0.33	10.3	9.26	4	29.89
35.4	-14.45	29.1	-10.93	22.8	-6.41	16.5	-0.21	10.2	9.46	3.9	30.47
35.3	-14.40	29	-10.86	22.7	-6.33	16.4	-0.09	10.1	9.67	3.8	31.07
35.2	-14.35	28.9	-10.80	22.6	-6.24	16.3	0.03	10	9.87	3.7	31.68
35.1	-14.30	28.8	-10.74	22.5	-6.16	16.2	0.15	9.9	10.08	3.6	32.32
35	-14.25	28.7	-10.67	22.4	-6.08	16.1	0.27	9.8	10.29	3.5	32.98
34.9	-14.20	28.6	-10.61	22.3	-5.99	16	0.39	9.7	10.50	3.4	33.65
34.8	-14.15	28.5	-10.54	22.2	-5.91	15.9	0.51	9.6	10.72	3.3	34.35
34.7	-14.10	28.4	-10.48	22.1	-5.82	15.8	0.64	9.5	10.94	3.2	35.07
34.6	-14.05	28.3	-10.42	22	-5.74	15.7	0.76	9.4	11.16	3.1	35.82
34.5	-14.00	28.2	-10.35	21.9	-5.65	15.6	0.89	9.3	11.38	3	36.60
34.4	-13.94	28.1	-10.29	21.8	-5.56	15.5	1.02	9.2	11.61	2.9	37.40
34.3	-13.89	28	-10.22	21.7	-5.48	15.4	1.14	9.1	11.84	2.8	38.24
34.2	-13.84	27.9	-10.16	21.6	-5.39	15.3	1.27	9	12.07	2.7	39.11
34.1	-13.79	27.8	-10.09	21.5	-5.30	15.2	1.40	8.9	12.30	2.6	40.01
34	-13.73	27.7	-10.02	21.4	-5.21	15.1	1.53	8.8	12.54	2.5	40.96
33.9	-13.68	27.6	-9.96	21.3	-5.13	15	1.66	8.7	12.78	2.4	41.95
33.8	-13.63	27.5	-9.89	21.2	-5.04	14.9	1.79	8.6	13.03	2.3	42.98
33.7	-13.58	27.4	-9.82	21.1	-4.95	14.8	1.93	8.5	13.27	2.2	44.07
33.6	-13.52	27.3	-9.76	21	-4.86	14.7	2.06	8.4	13.52	2.1	45.21
33.5	-13.47	27.2	-9.69	20.9	-4.77	14.6	2.20	8.3	13.78	2	46.41
33.4	-13.42	27.1	-9.62	20.8	-4.67	14.5	2.33	8.2	14.03	1.9	47.69
33.3	-13.36	27	-9.55	20.7	-4.58	14.4	2.47	8.1	14.29	1.8	49.03
33.2	-13.31	26.9	-9.49	20.6	-4.49	14.3	2.61	8	14.56	1.7	50.47
33.1	-13.25	26.8	-9.42	20.5	-4.40	14.2	2.75	7.9	14.83	1.6	52.00
33	-13.20	26.7	-9.35	20.4	-4.31	14.1	2.89	7.8	15.10	1.5	53.63
32.9	-13.15	26.6	-9.28	20.3	-4.21	14	3.03	7.7	15.37	1.4	55.40
32.8	-13.09	26.5	-9.21	20.2	-4.12	13.9	3.17	7.6	15.65	1.3	57.31
32.7	-13.04	26.4	-9.14	20.1	-4.02	13.8	3.32	7.5	15.94	1.2	59.38
32.6	-12.98	26.3	-9.07	20	-3.93	13.7	3.46	7.4	16.22	1.1	61.66
32.5	-12.93	26.2	-9.00	19.9	-3.83	13.6	3.61	7.3	16.52	1	64.18
32.4	-12.87	26.1	-8.93	19.8	-3.74	13.5	3.76	7.2	16.81	0.9	66.99
32.3	-12.81	26	-8.86	19.7	-3.64	13.4	3.91	7.1	17.11	0.8	70.17
32.2	-12.76	25.9	-8.79	19.6	-3.54	13.3	4.06	7	17.42	0.7	73.81
32.1	-12.70	25.8	-8.71	19.5	-3.44	13.2	4.21	6.9	17.73	0.6	78.08
32	-12.65	25.7	-8.64	19.4	-3.34	13.1	4.36	6.8	18.05	0.5	83.22
31.9	-12.59	25.6	-8.57	19.3	-3.25	13	4.52	6.7	18.37	0.4	89.63
31.8	-12.53	25.5	-8.50	19.2	-3.15	12.9	4.67	6.6	18.69	0.3	98.09
31.7	-12.48	25.4	-8.43	19.1	-3.05	12.8	4.83	6.5	19.03	0.2	110.42

Formula: T= 333.5*((Kohms)^-07168)+(2.5*(LOG(Kohms/16.325))^2-273)

TETRA TECH

Doc ID: c2785cc94a83cebef7dfe33a7142486261d3887b

APPENDIX C

SLOPE INCLINOMETER READING QUICK GUIDE

Doc ID: c2785cc94a83cebef7dfe33a7142486261d3887b

INCLINOMETER READINGS - QUICK GUIDE

1. Remove protective caps from probe and reel. Carefully attach the probe to the reel and tighten (should be snug, but only hand-tight).
2. Turn on the reel. This will energize the accelerometers in the probe, making it less sensitive to bumps. Continue to handle the probe carefully.
3. Connect to the reel and probe using the field app.
4. Place inclinometer probe in the SI casing with the **upper wheels** facing in the **"A+" (downslope) direction**.
5. Check that probe wheels are within the internal grooves on the SI casing.
6. Gently lower probe down to the bottom of the hole.
    - Make sure the probe does not bounce off the bottom of the hole. Lower it carefully for the last few meters above the expected depth of the borehole.
7. Place the metal top cap on the SI casing. Maintain consistent top cap positioning between readings.
8. Set the metal cable crimp in the top cap slot at the desired (bottom) depth. Let the probe sit undisturbed for 10 minutes at that depth to allow temperature to adjust.
9. Begin taking readings by tapping **Accept** on the field app. Noise should be low, less than 50 uV.
10. Raise the probe, 0.5 m at a time, accepting readings at each depth. Allow the readings to stabilize with noise less than 50 uV before accepting.
11. Continue accepting readings until the top is reached. Be careful not to allow wheels to snap outward as the probe exits the casing.
12. Follow the software prompts and rotate the probe 180° (i.e., upper wheels in "A-" (downslope) direction).
13. Gently lower the probe for the second reading set. The probe does not need to rest at the bottom depth for this reading set.
14. Begin taking readings. Continue to make sure that noise is low when accepting readings. **Checksums will also be displayed on the second reading set, these should be small and consistent**. High checksums indicate errors in probe positioning (e.g., cable is resting on depth label instead of metal crimp), irregularities in the SI casing (e.g., expansion couplings), or fouling of the probe (e.g., from bumps or drops).
    - If checksums are inconsistent or high, the entire reading (A+ and A- sets) should be repeated.
15. Continue accepting readings until the top is reached. Be careful not to allow wheels to snap outward as the probe exits the casing.
16. Save inclinometer readings, power off the reel, disconnect the probe and place it back in the case.

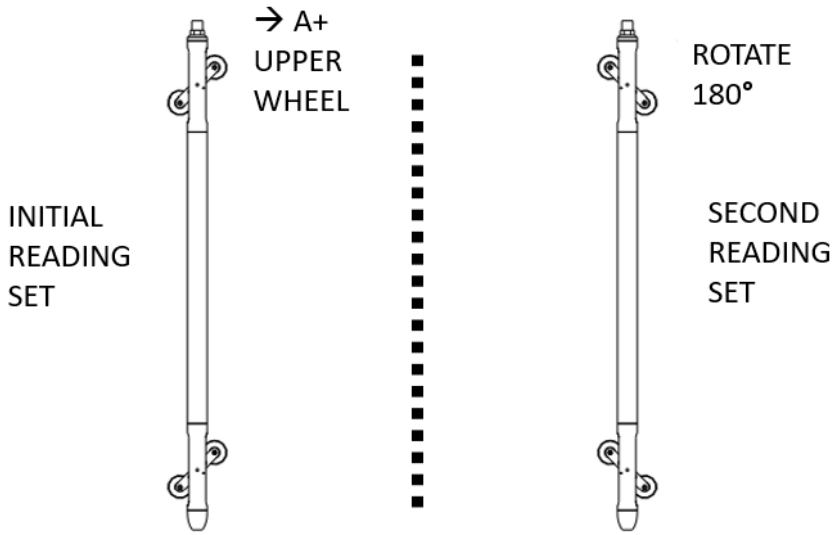

Title	For Signature - KH DSTF OMS - Rev3
File name	KH_DSTF_OMS_-_Rev3__ID_1033_.pdf
Document ID	c2785cc94a83cebef7dfe33a7142486261d3887b
Audit trail date format	MM / DD / YYYY
Status	Signed

Document History

SENT	**06 / 13 / 2025** 19:10:26 UTC	Sent for signature to Ian MacIntyre (ian.macintyre@tetratech.com), Gary Koop (gary.koop@tetratech.com), Coralee Kirby (ckirby@hecla.com), Ryan Tilstra (rtilstra@hecla.com), Denver Winslow (dwinslow@hecla.com), Brett Clute (bclute@hecla.com), Jason Palin (jpalin@hecla.com), Brian Erickson (berickson@hecla.com), Carlos Aguiar (caguiar@hecla.com) and Aaron Marsh (amarsh@hecla.com) from amarsh@hecla.com IP: 107.116.255.49
VIEWED	**06 / 13 / 2025** 19:10:36 UTC	Viewed by Aaron Marsh (amarsh@hecla.com) IP: 107.116.255.49
SIGNED	**06 / 13 / 2025** 19:11:07 UTC	Signed by Aaron Marsh (amarsh@hecla.com) IP: 107.116.255.49
VIEWED	**06 / 13 / 2025** 19:12:54 UTC	Viewed by Carlos Aguiar (caguiar@hecla.com) IP: 152.39.222.87

Dropbox Sign

Audit trail

Title	For Signature - KH DSTF OMS - Rev3
File name	KH_DSTF_OMS_-_Rev3__ID_1033_.pdf
Document ID	c2785cc94a83cebef7dfe33a7142486261d3887b
Audit trail date format	MM / DD / YYYY
Status	Signed

Document History

VIEWED	**06 / 13 / 2025** 20:20:59 UTC	Viewed by Brett Clute (bclute@hecla.com) IP: 180.149.16.198
VIEWED	**06 / 13 / 2025** 20:24:52 UTC	Viewed by Ian MacIntyre (ian.macintyre@tetratech.com) IP: 199.85.230.42
SIGNED	**06 / 13 / 2025** 20:25:20 UTC	Signed by Ian MacIntyre (ian.macintyre@tetratech.com) IP: 199.85.230.42
VIEWED	**06 / 13 / 2025** 22:43:10 UTC	Viewed by Gary Koop (gary.koop@tetratech.com) IP: 172.219.246.17
SIGNED	**06 / 13 / 2025** 22:43:41 UTC	Signed by Gary Koop (gary.koop@tetratech.com) IP: 172.219.246.17
VIEWED	**06 / 15 / 2025** 15:48:08 UTC	Viewed by Coralee Kirby (ckirby@hecla.com) IP: 213.188.85.132

Dropbox Sign

Audit trail

Title	For Signature - KH DSTF OMS - Rev3
File name	KH_DSTF_OMS_-_Rev3__ID_1033_.pdf
Document ID	c2785cc94a83cebef7dfe33a7142486261d3887b
Audit trail date format	MM / DD / YYYY
Status	Signed

Document History

SIGNED	**06 / 15 / 2025** 15:48:34 UTC	Signed by Coralee Kirby (ckirby@hecla.com) IP: 50.117.207.253
VIEWED	**06 / 17 / 2025** 14:39:21 UTC	Viewed by Jason Palin (jpalin@hecla.com) IP: 216.194.81.140
SIGNED	**06 / 17 / 2025** 14:41:28 UTC	Signed by Jason Palin (jpalin@hecla.com) IP: 216.176.47.241
VIEWED	**06 / 19 / 2025** 11:59:06 UTC	Viewed by Ryan Tilstra (rtilstra@hecla.com) IP: 2.57.76.231
SIGNED	**06 / 19 / 2025** 12:00:50 UTC	Signed by Ryan Tilstra (rtilstra@hecla.com) IP: 170.203.202.95
VIEWED	**06 / 20 / 2025** 19:17:28 UTC	Viewed by Denver Winslow (dwinslow@hecla.com) IP: 170.203.202.95

Dropbox Sign

Audit trail

Title	For Signature - KH DSTF OMS - Rev3
File name	KH_DSTF_OMS_-_Rev3__ID_1033_.pdf
Document ID	c2785cc94a83cebef7dfe33a7142486261d3887b
Audit trail date format	MM / DD / YYYY
Status	Signed

Document History

SIGNED	**06 / 20 / 2025** 19:18:05 UTC	Signed by Denver Winslow (dwinslow@hecla.com) IP: 170.203.202.95
SIGNED	**06 / 24 / 2025** 12:38:46 UTC	Signed by Brett Clute (bclute@hecla.com) IP: 66.62.121.201
VIEWED	**07 / 01 / 2025** 15:24:14 UTC	Viewed by Brian Erickson (berickson@hecla.com) IP: 216.194.81.140
SIGNED	**07 / 01 / 2025** 15:25:20 UTC	Signed by Brian Erickson (berickson@hecla.com) IP: 209.165.165.201
SIGNED	**07 / 14 / 2025** 18:35:20 UTC	Signed by Carlos Aguiar (caguiar@hecla.com) IP: 208.94.84.19
COMPLETED	**07 / 14 / 2025** 18:35:20 UTC	The document has been completed.